rond × DE Oude SCHAKELAAR

unifit hardwired type E/F Ø45
installation instruction

①

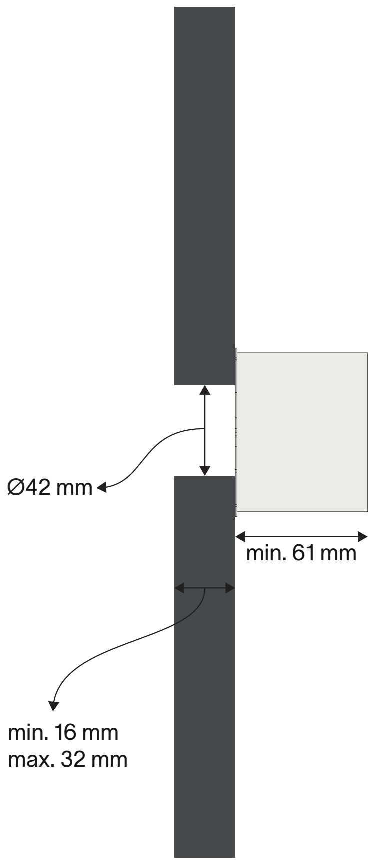
Ø42 mm
min. 61 mm
min. 16 mm
max. 32 mm

Drill the installation hole and optional countersink.

②

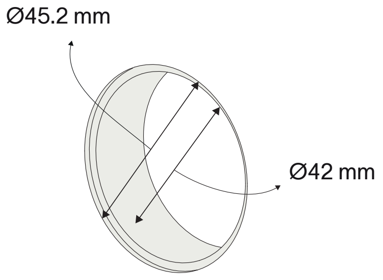
Ø45.2 mm
Ø42 mm

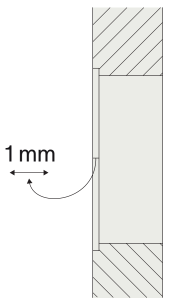

Flush mount countersink.

③

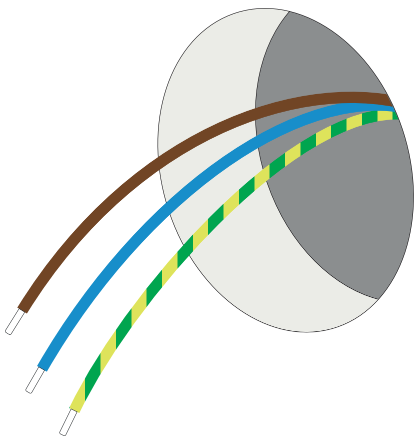

POWER OFF

Turn the power off.

4

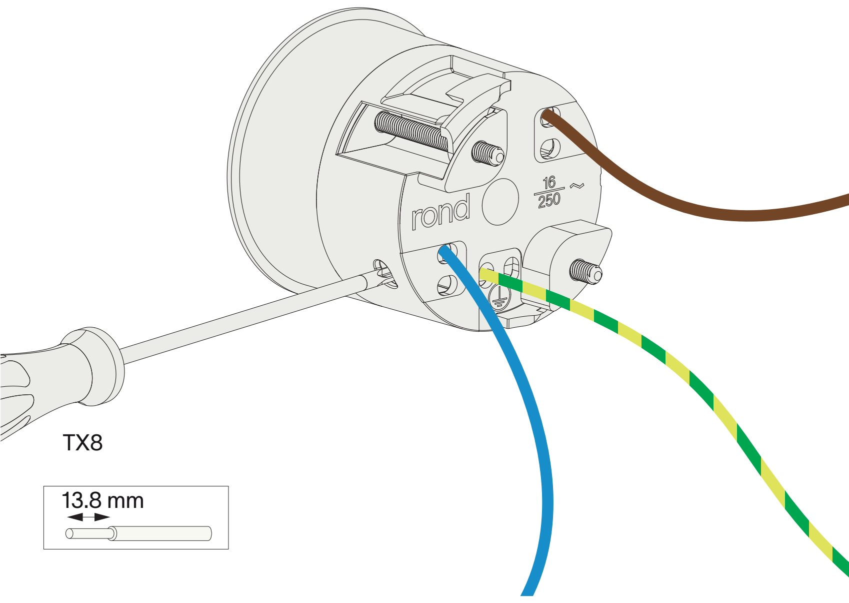
rond
16
250
~
TX8
13.8 mm

Make all necessary connections.

5

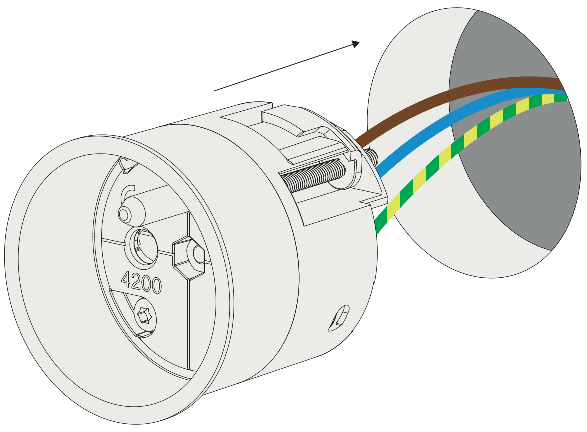

Insert the socket in the hole.

6

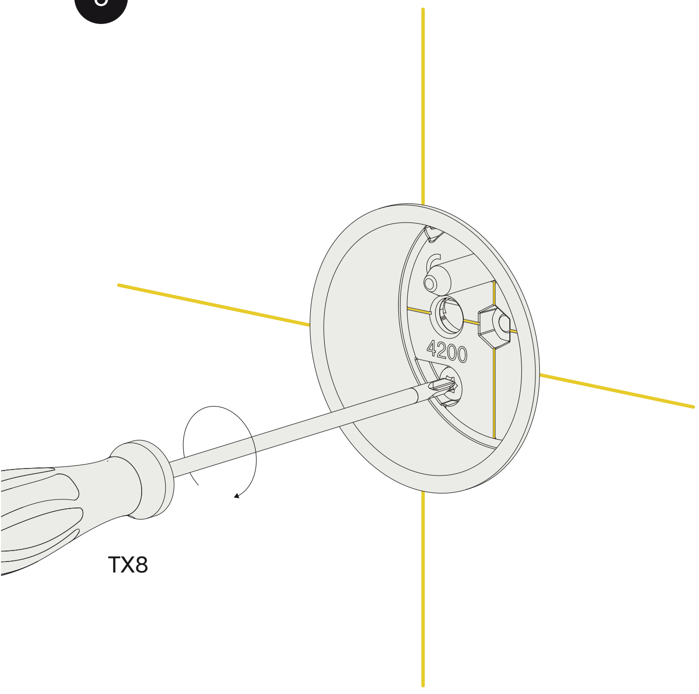

Level the socket and fixate it by tightening the screws.

7

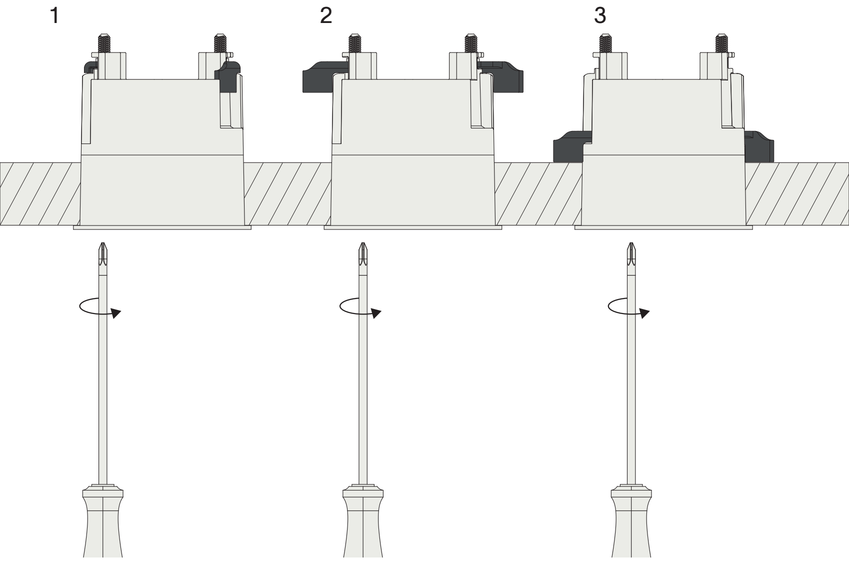

Tighten the screws until the clamps are fully secured.

8

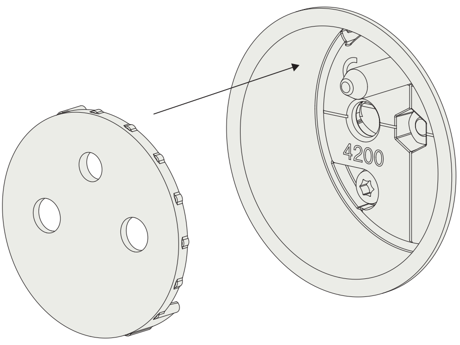

Install the cover plate.

9

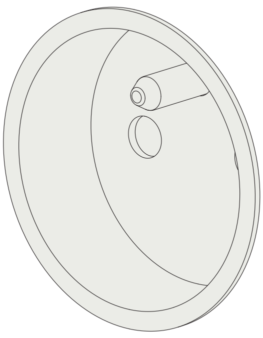

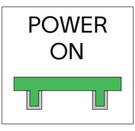

Turn the power on.

---

for removal

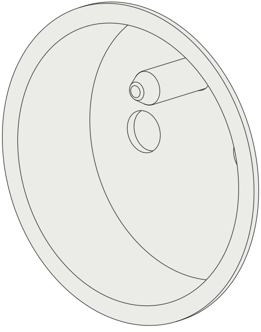

POWER
OFF

Turn the power off before removing the socket.

10

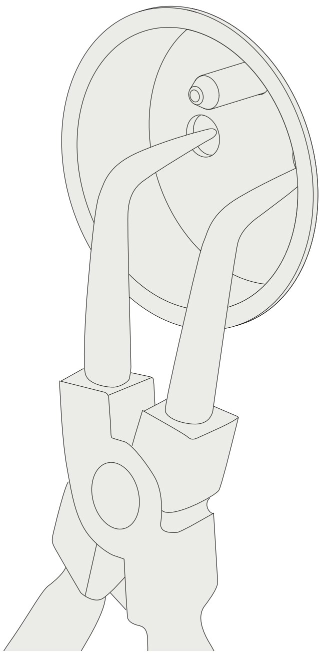

Remove the cover plate with pliers.

11

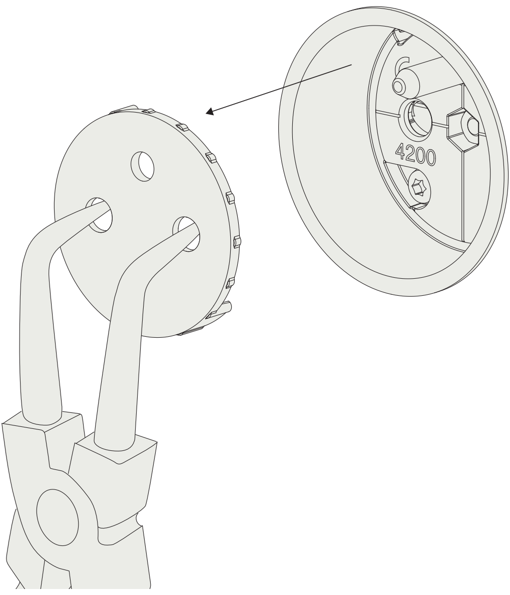

12

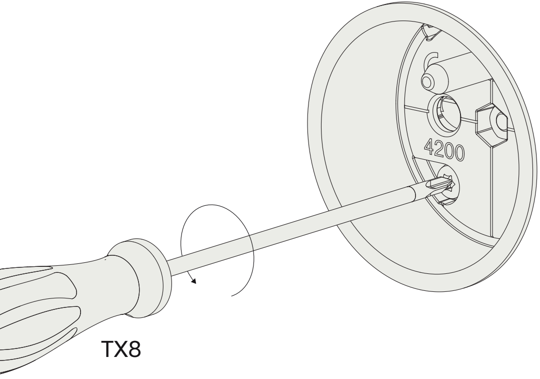

Loosen the screws.

13

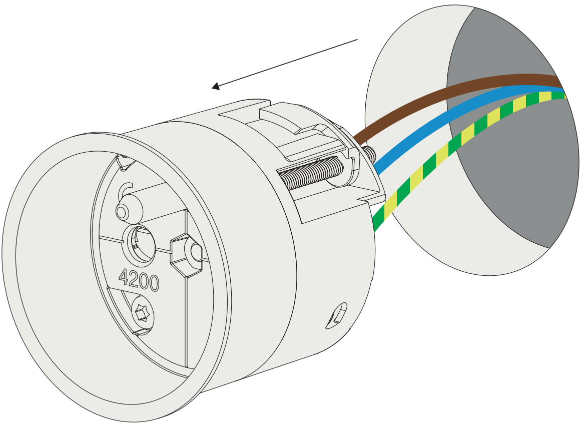

Remove the socket.

thank you for choosing rond

rond × DE Oude SCHAKELAAR

Installation must be done by skilled professionals only and instructions must be followed at all times. Warranty will not apply in case of wrongful use of if unskilled personnel attempts to repair a product.