rond DE Oude SCHAKELAAR

rond 2.0 switch 230V
installation instruction

1

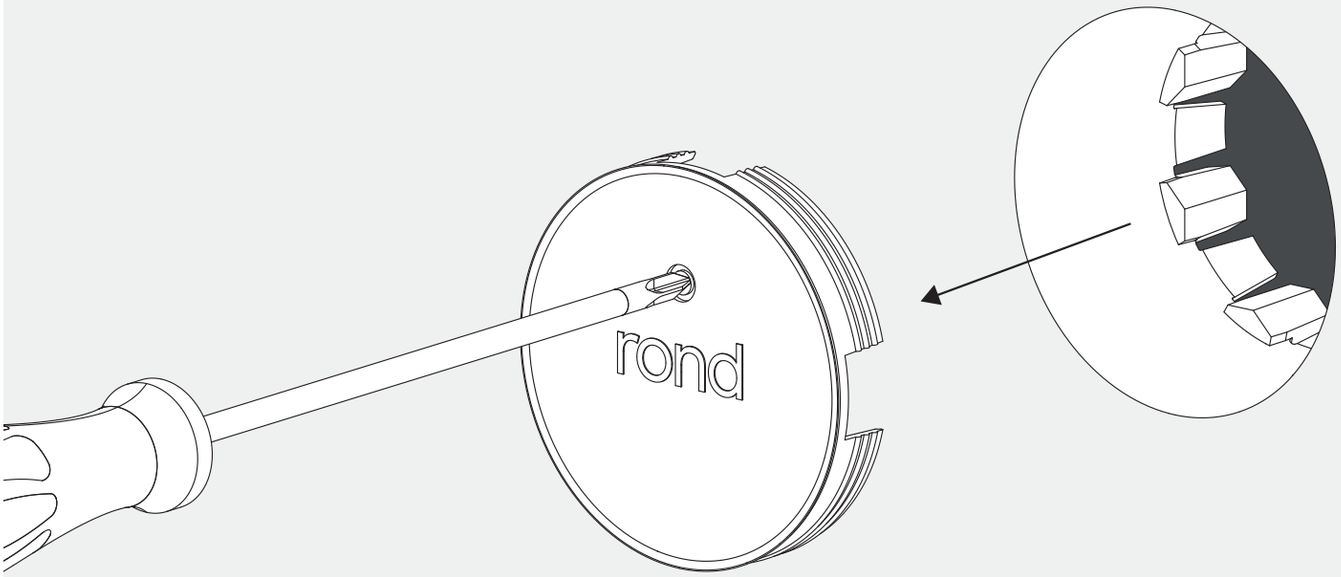

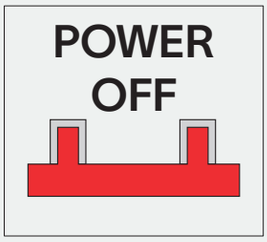

2

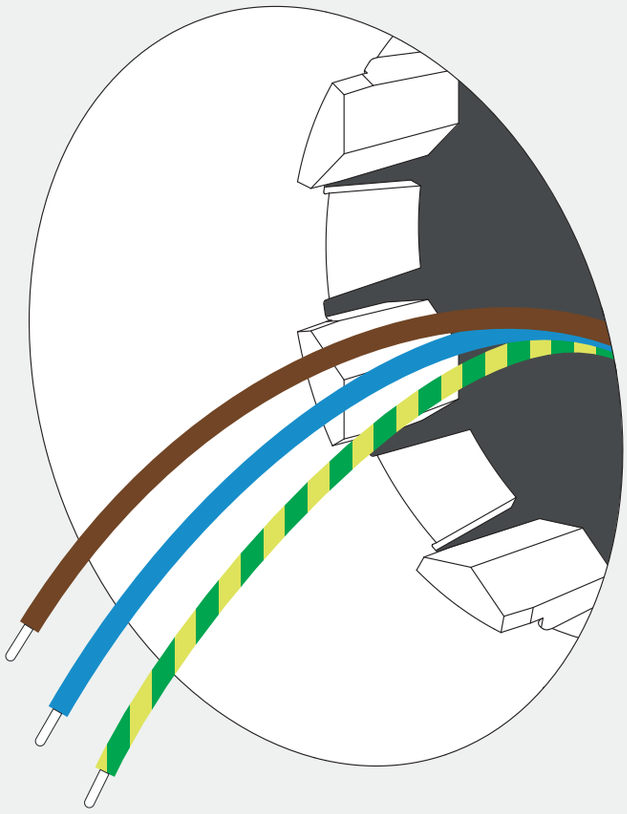

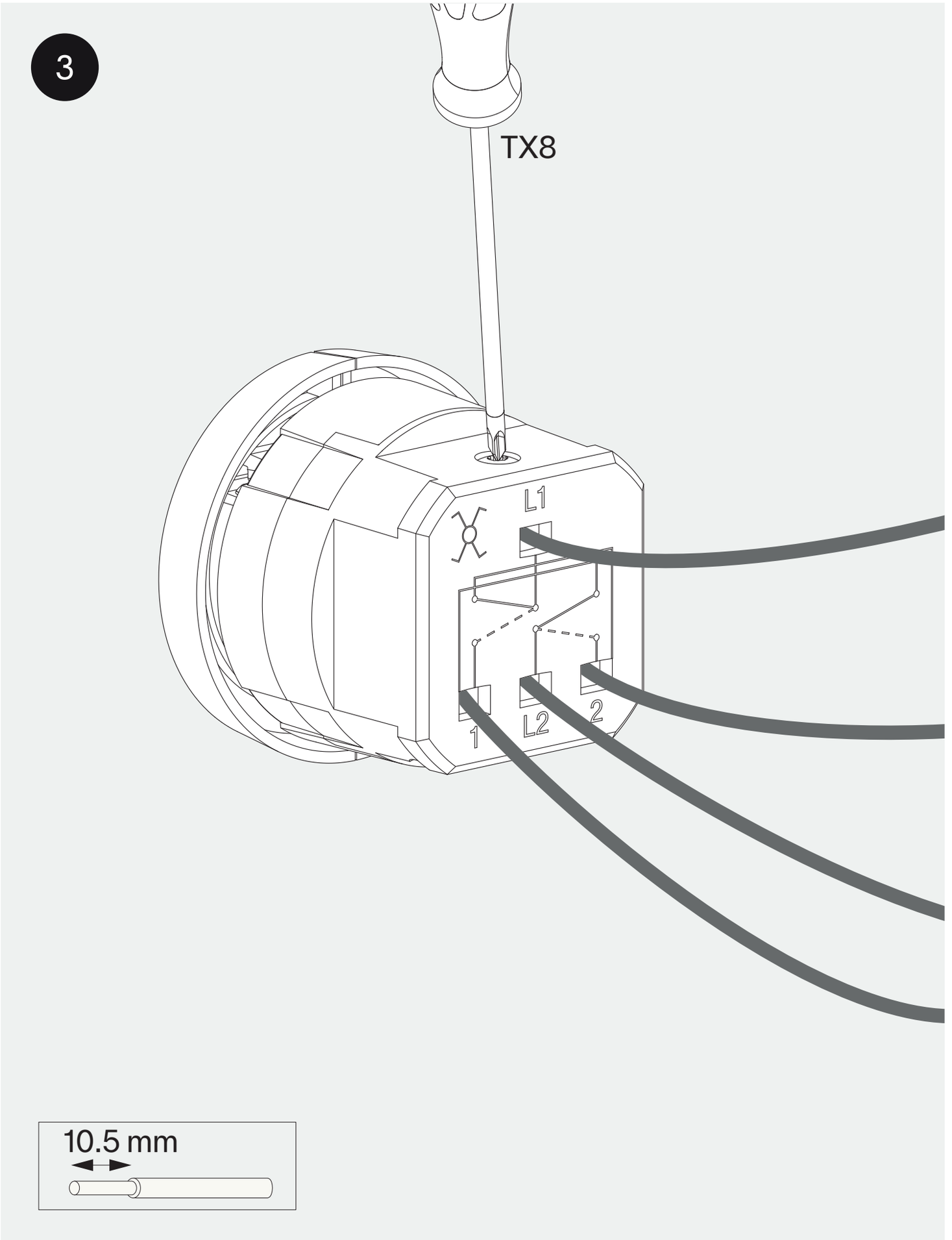
3
TX8
L1
1
L2
2
10.5 mm

single-pole switch

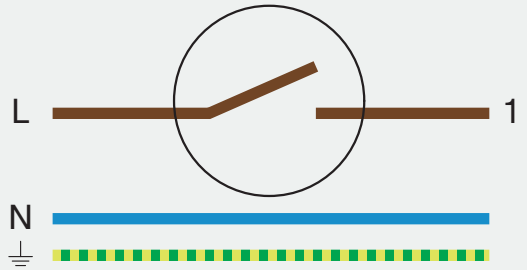

two-pole switch

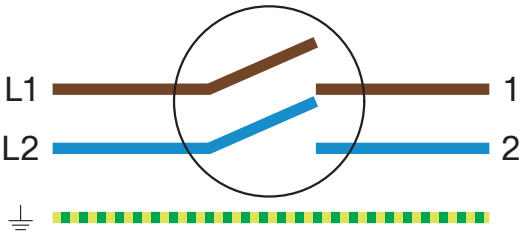

two-way switch

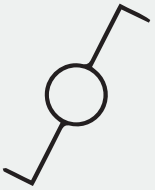

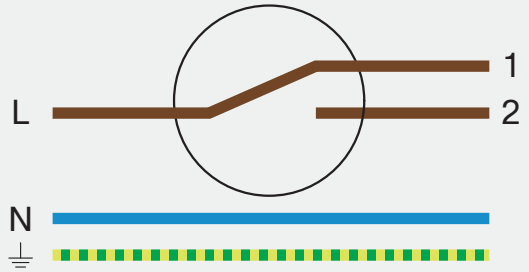

intermediate switch

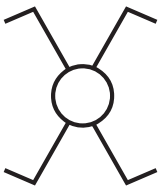

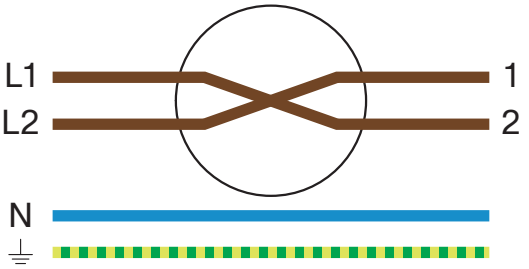

two-pole two-way switch

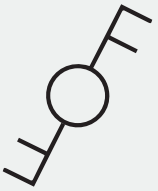

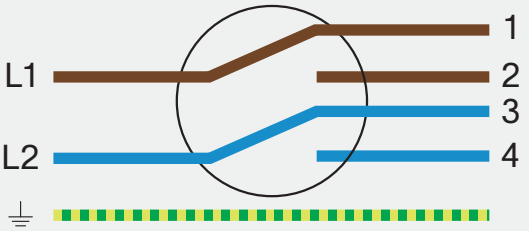

two circuit switch

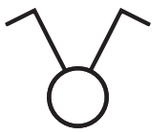

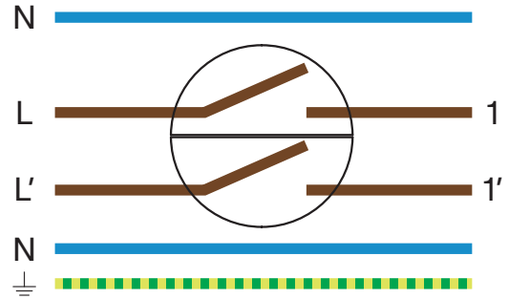

double two-way switch

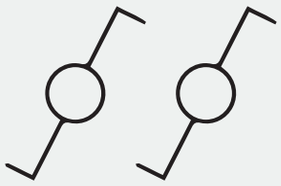

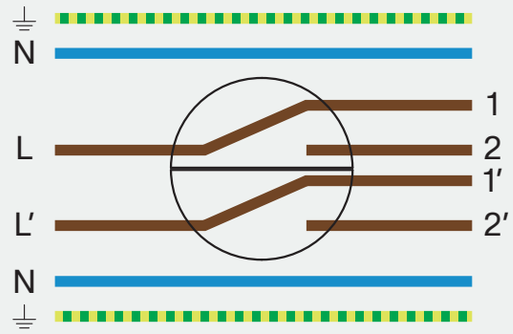

push button NO or NC

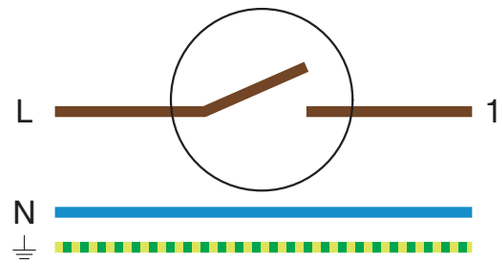

double push button NO or NC

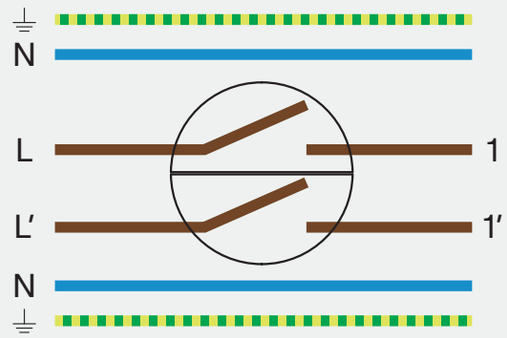

4

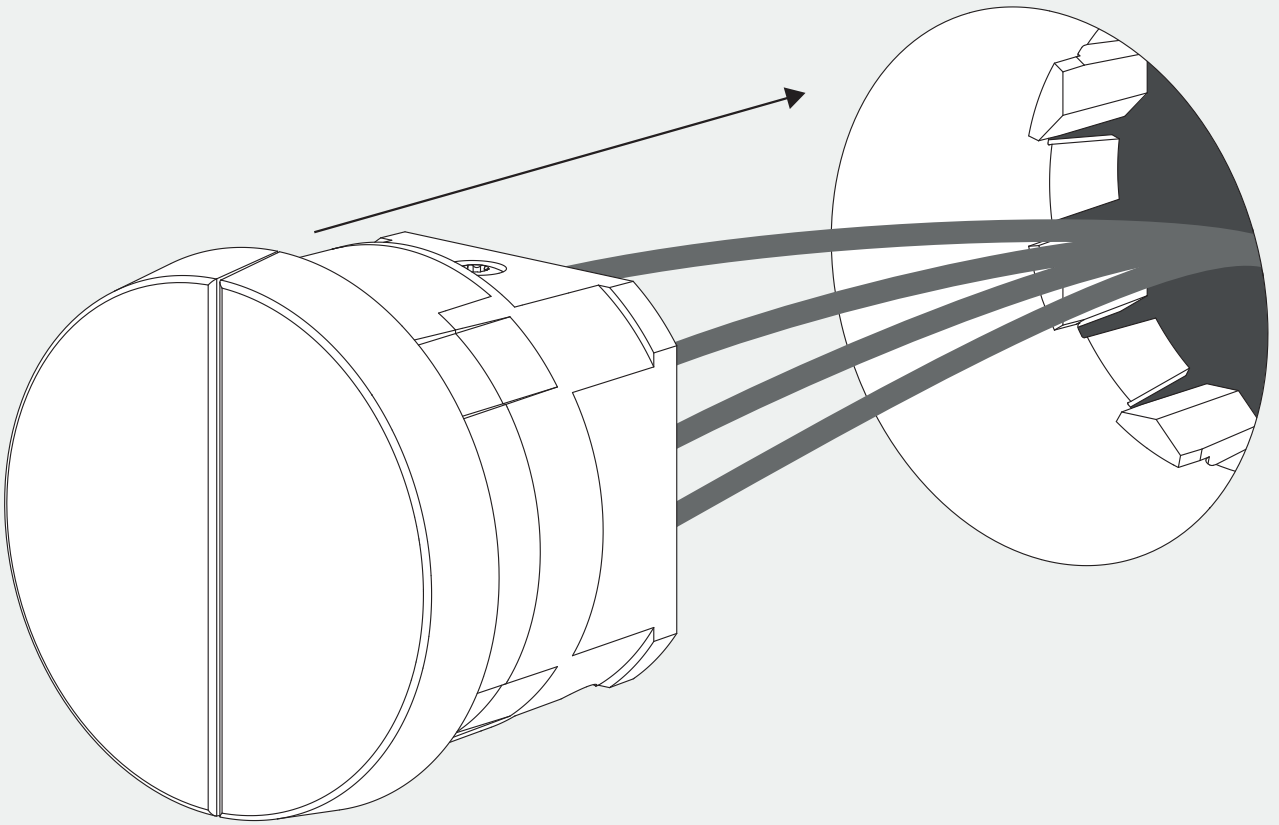

5

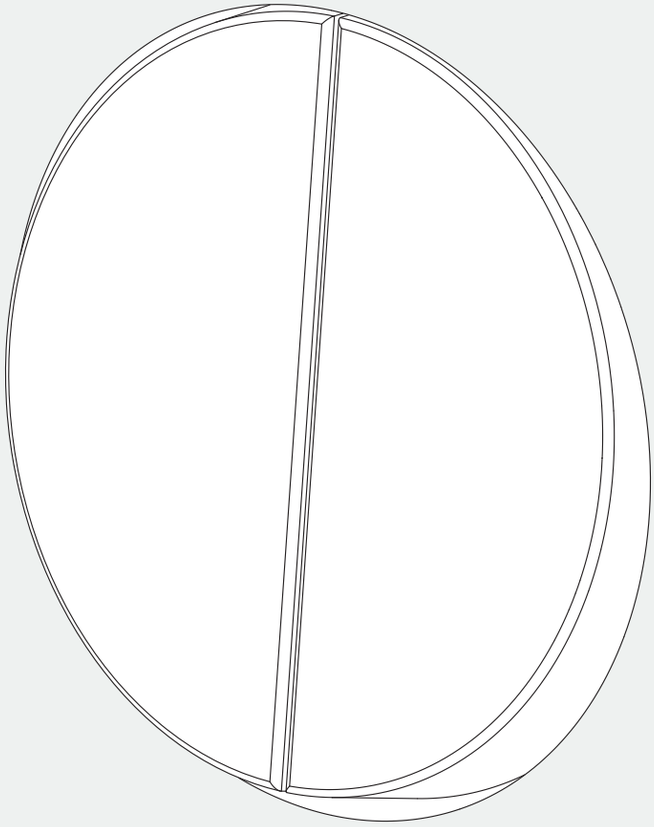

for small trim

6

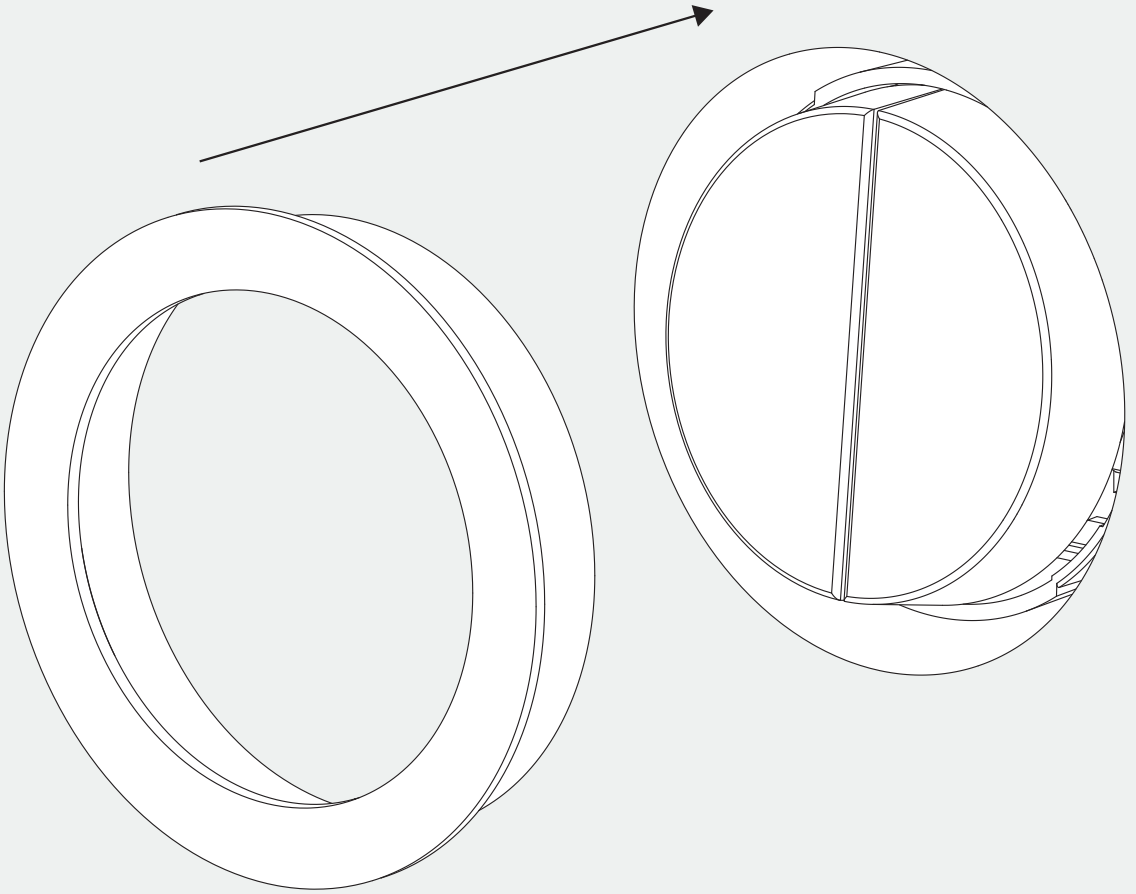

7

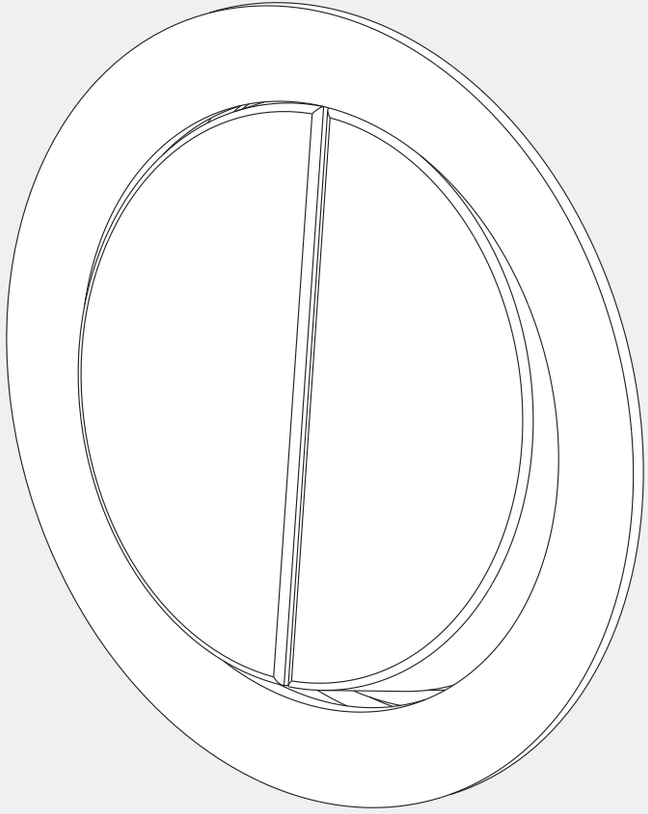

for removal

8

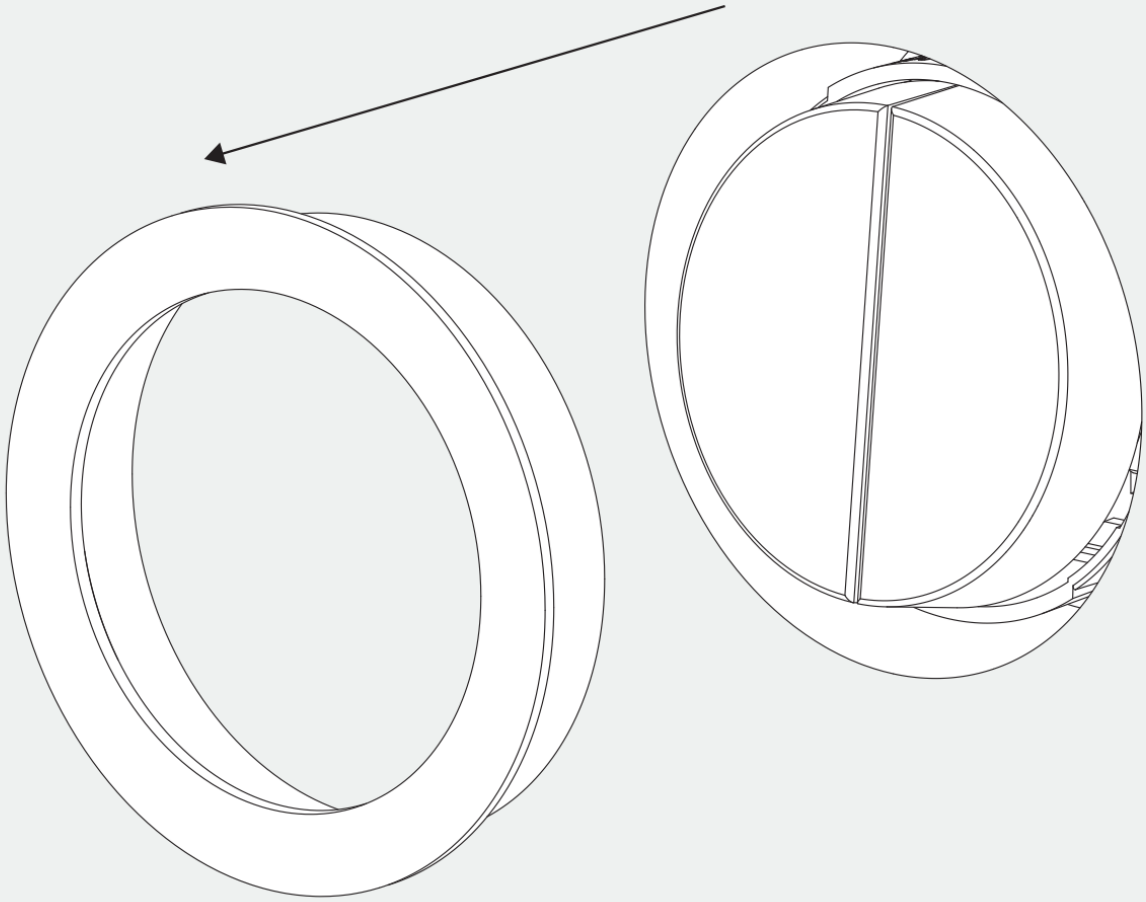

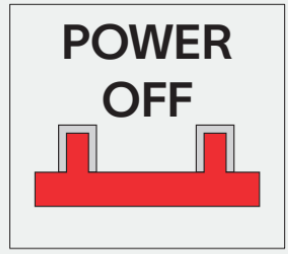

9

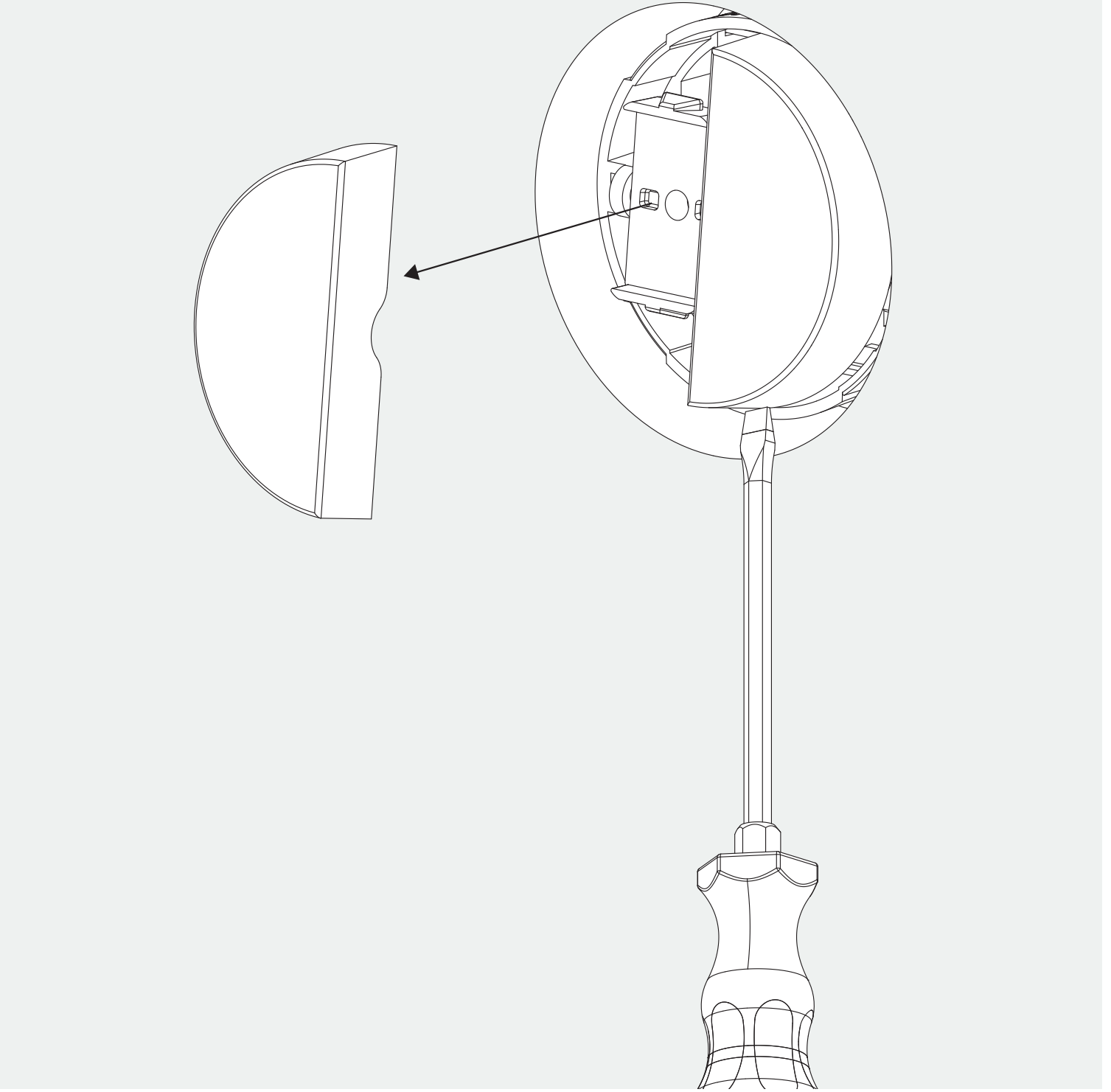

10

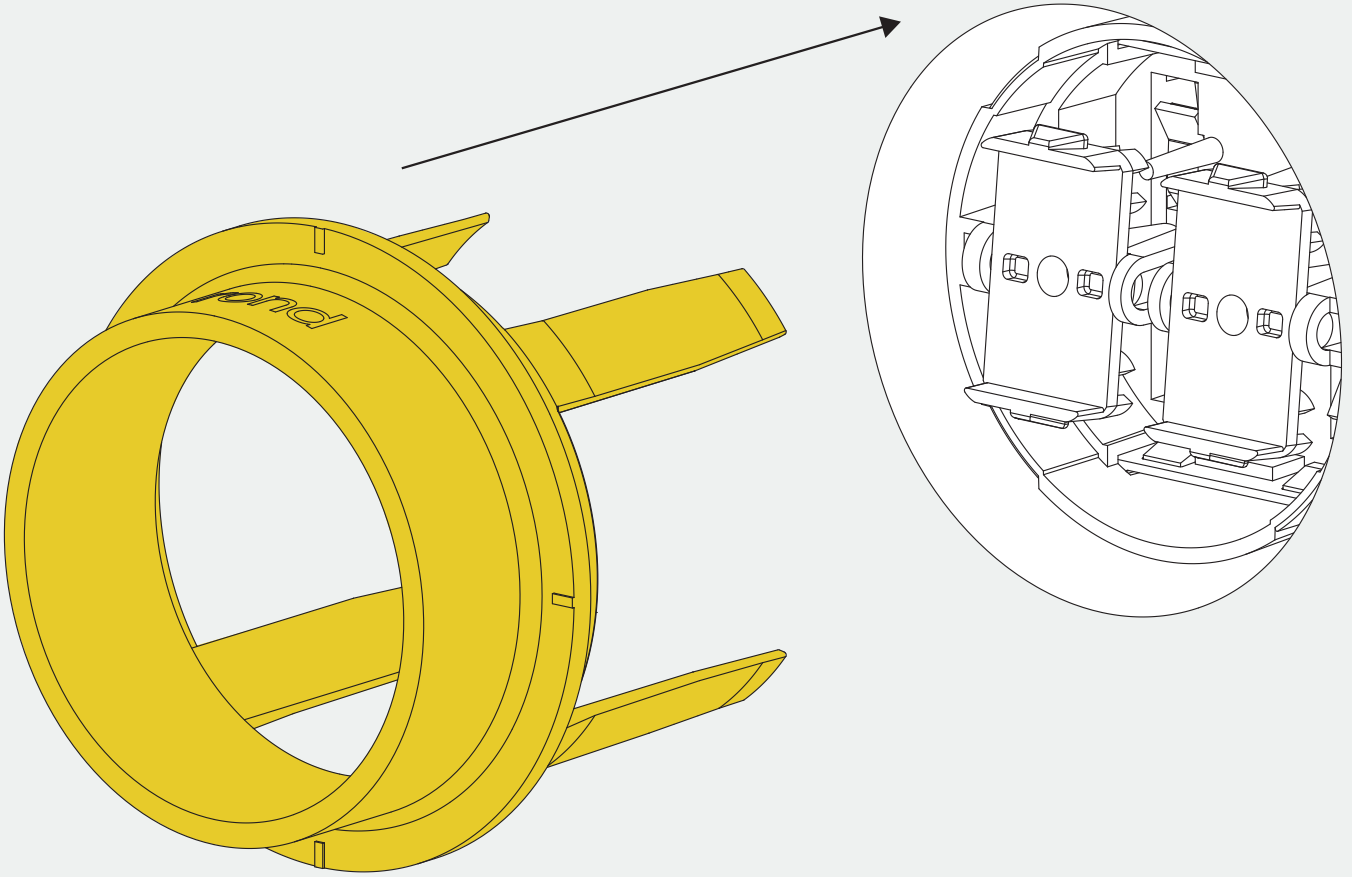

11

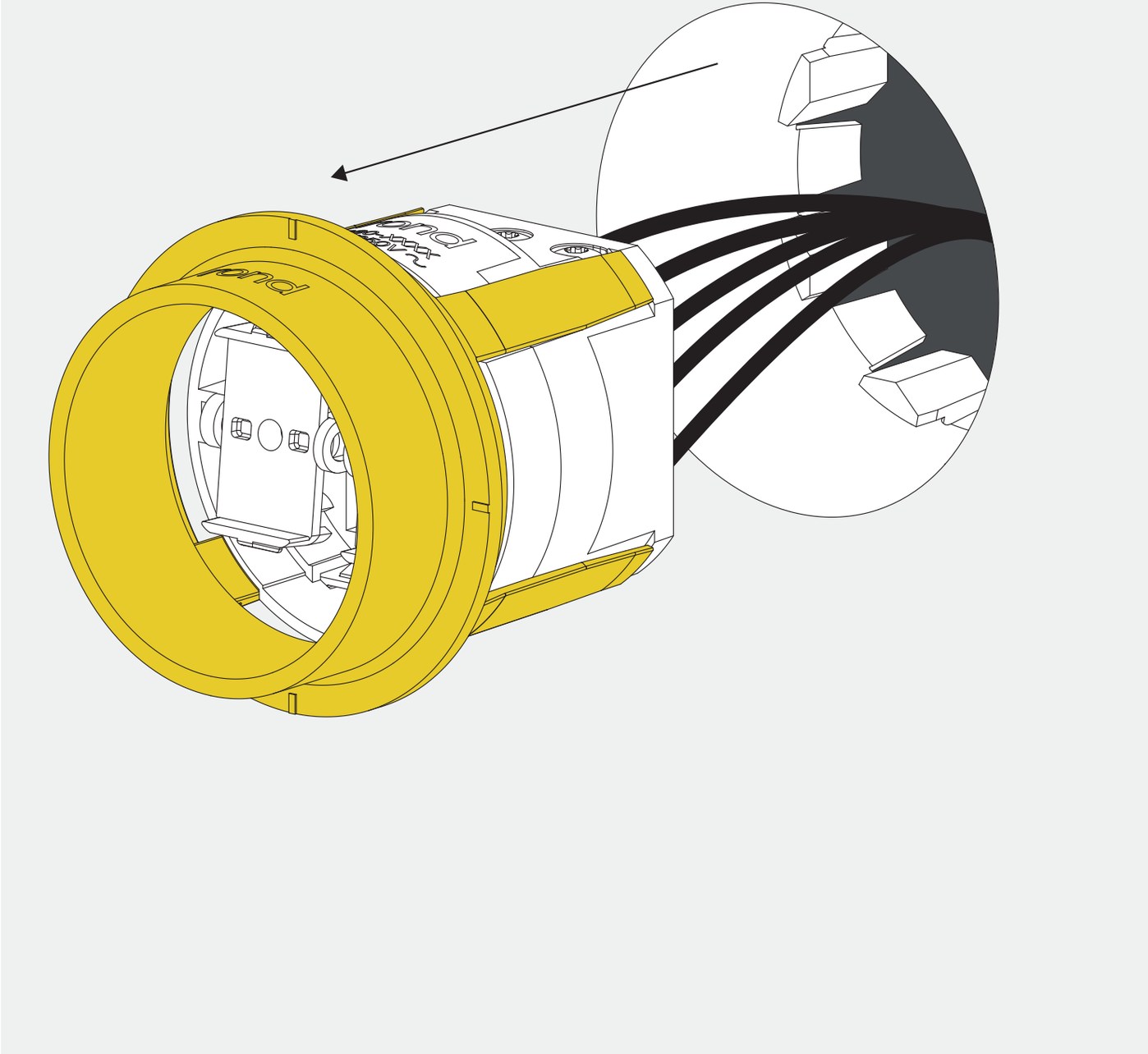

thank you for choosing rond

10AX
250V

DE Oude SCHAKELAAR

Installation must be done by skilled professionals only and instructions must be followed at all times. Warranty will not apply in case of wrongful use of if unskilled personnel attempts to repair a product.