rond DE Oude SCHAKELAAR

# multifit socket
## installation instruction

1

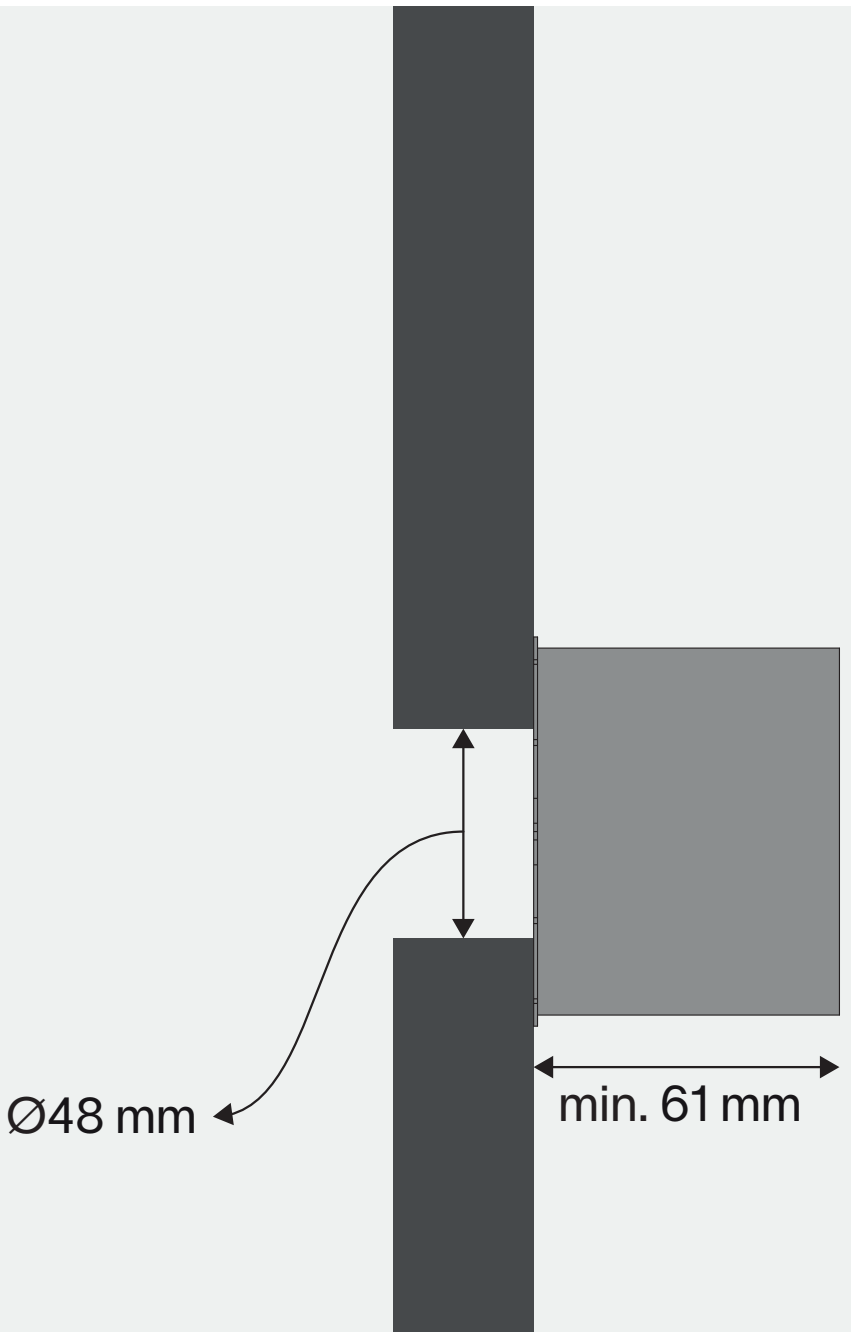

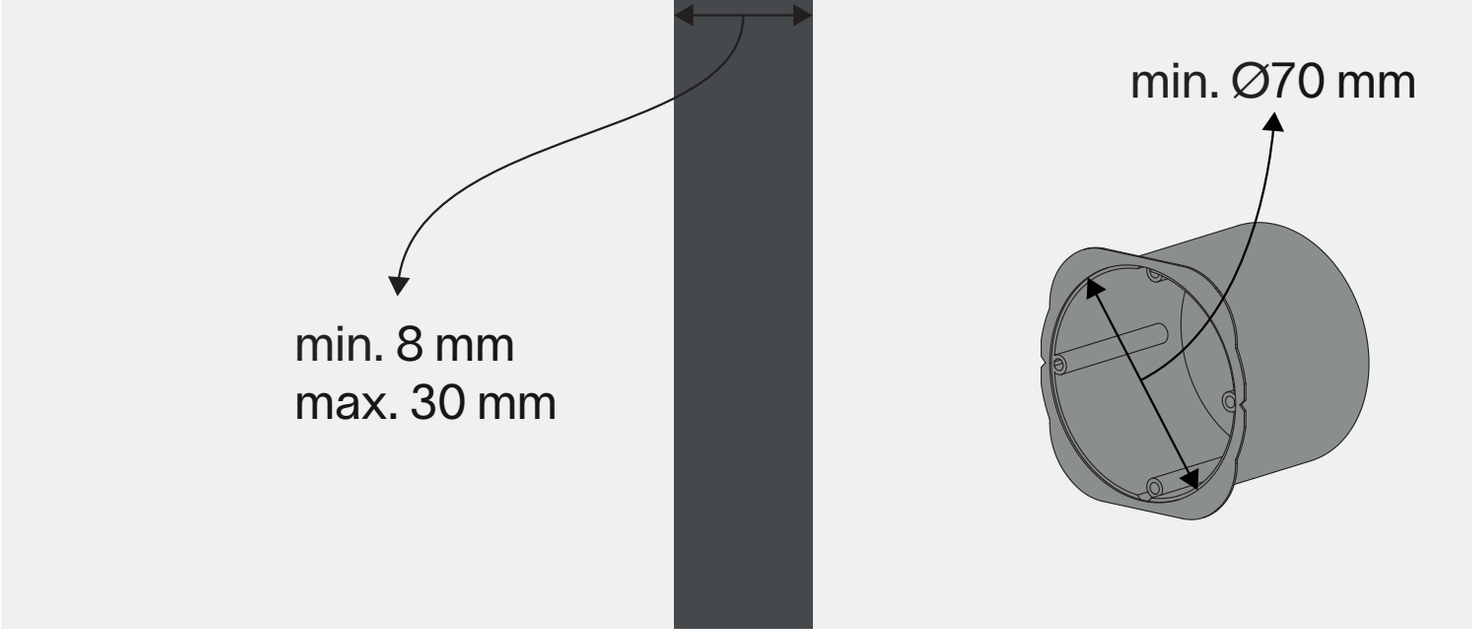


## optional flush mount countersink

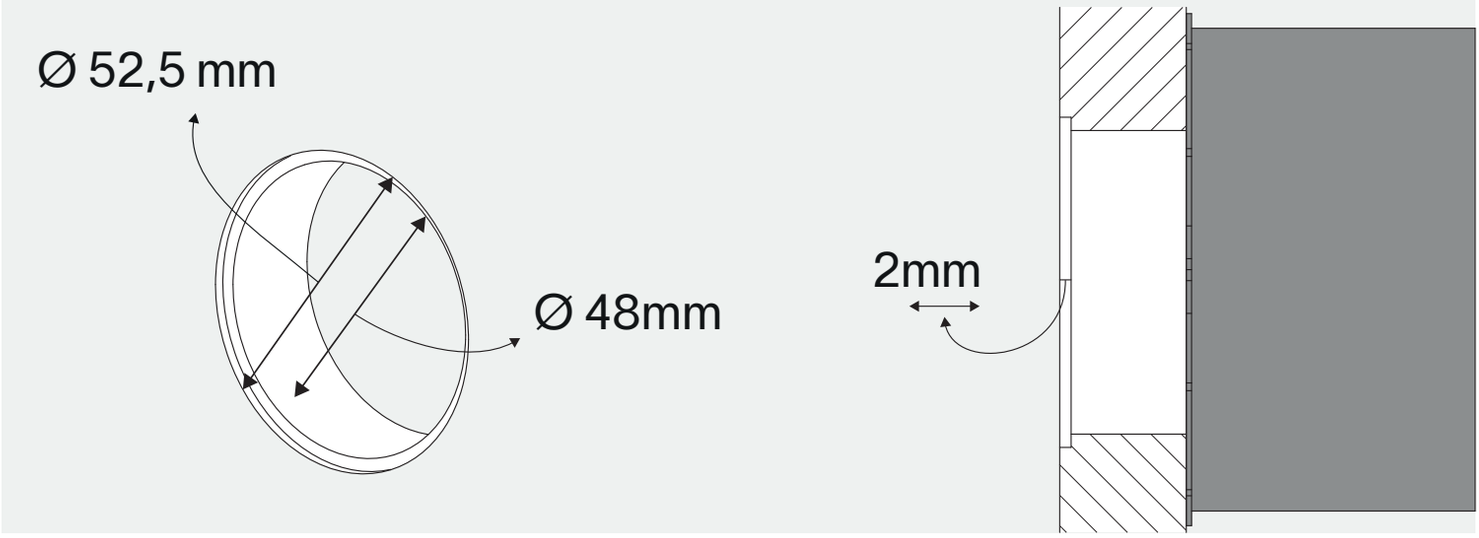


2

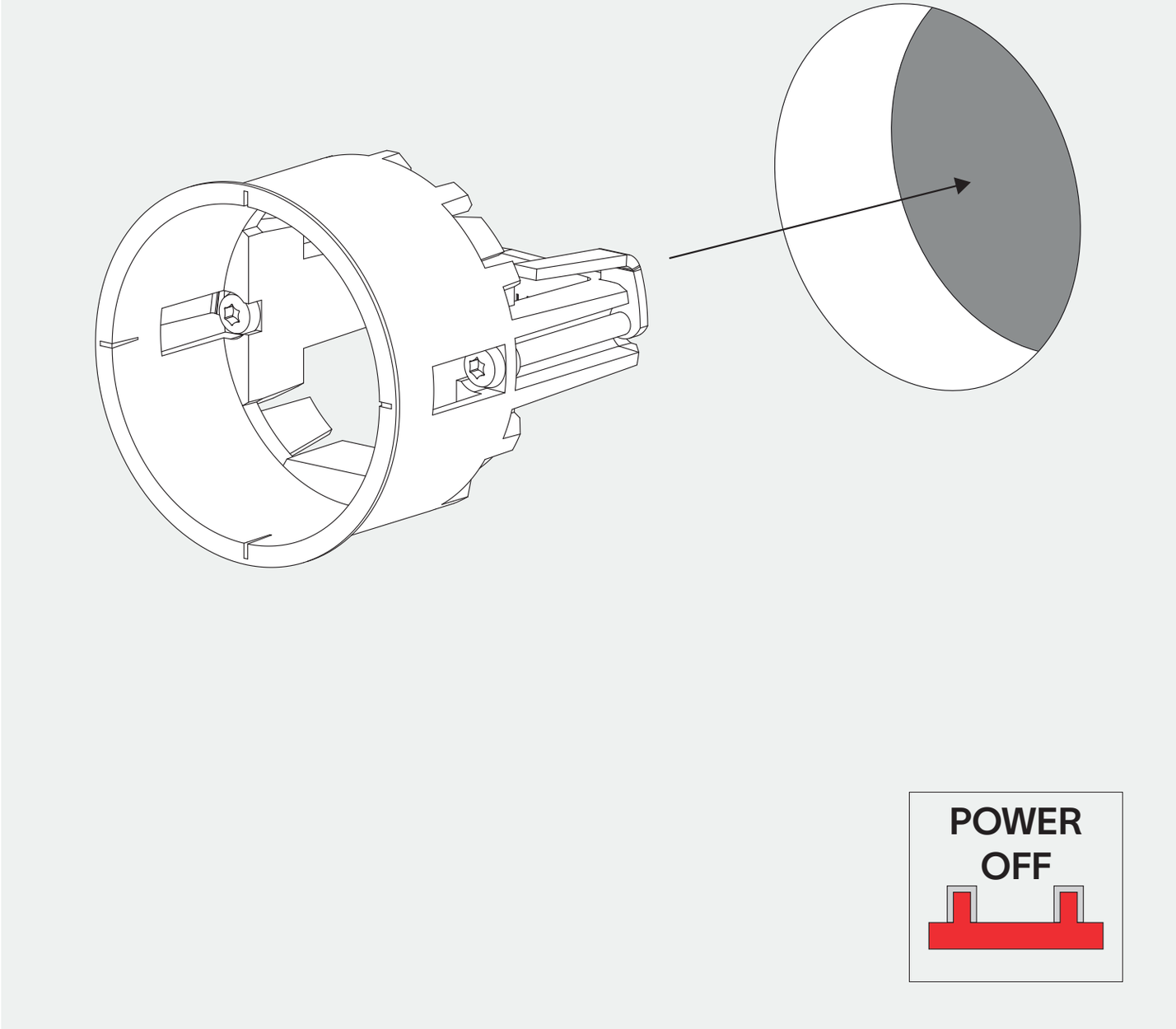


3

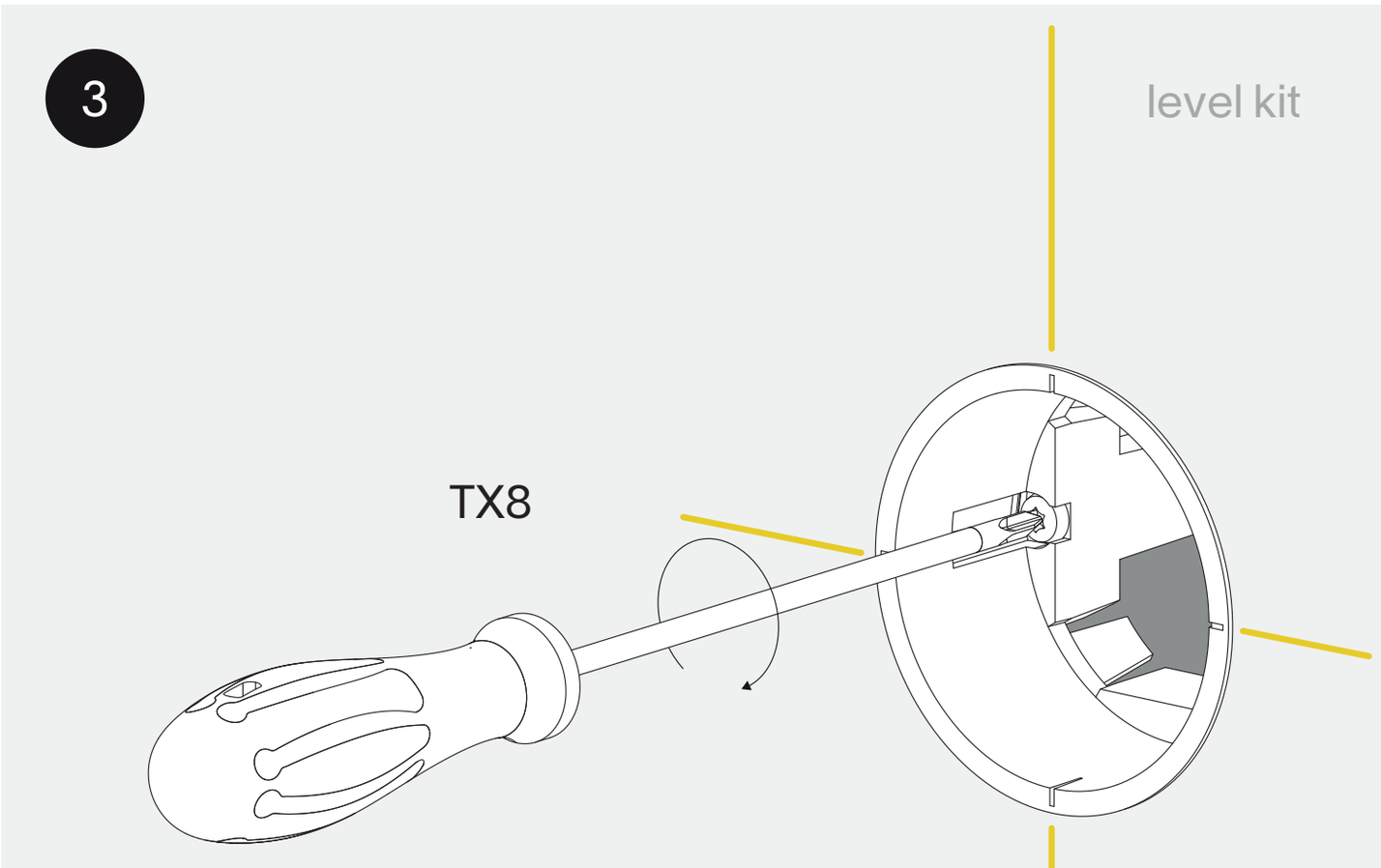

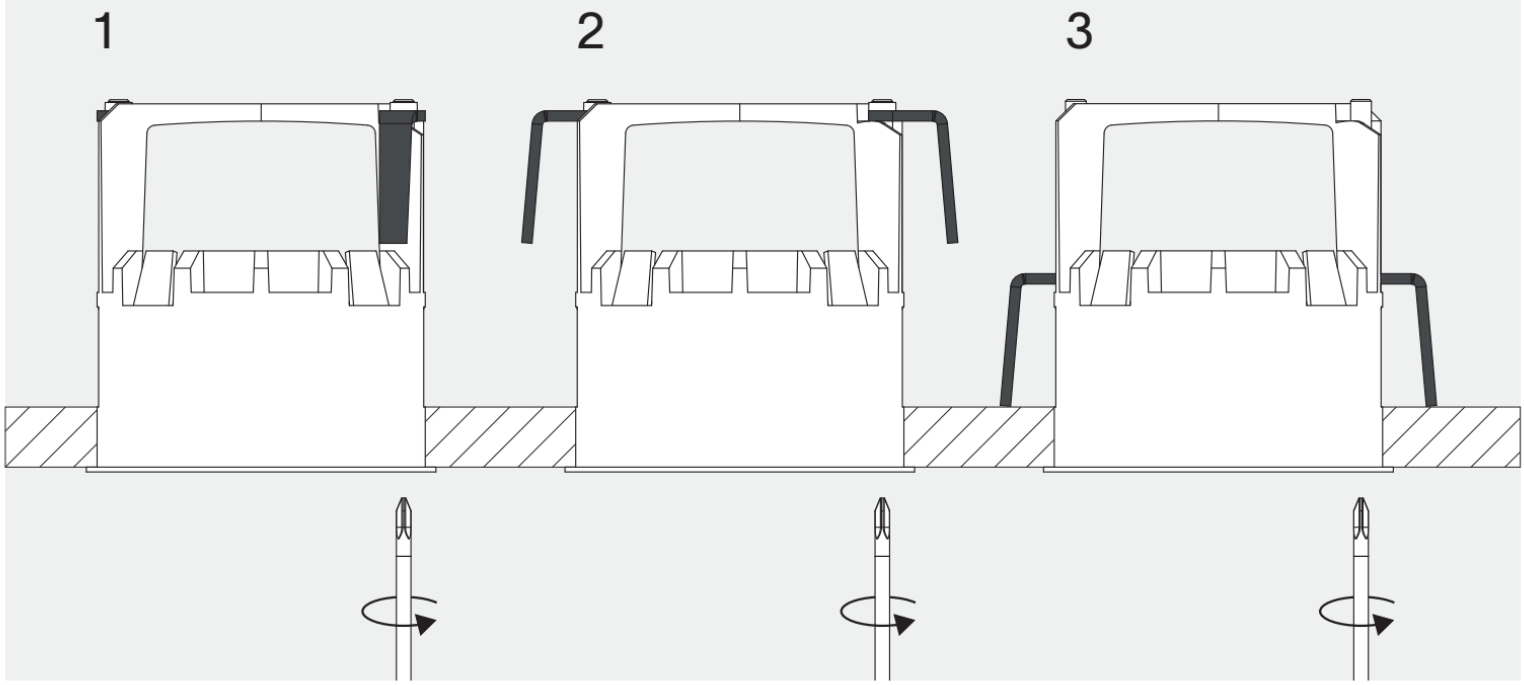


4

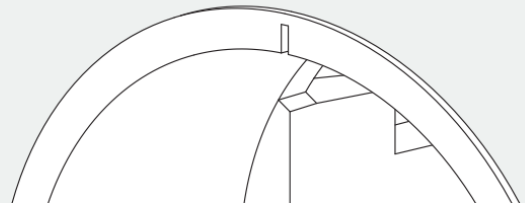

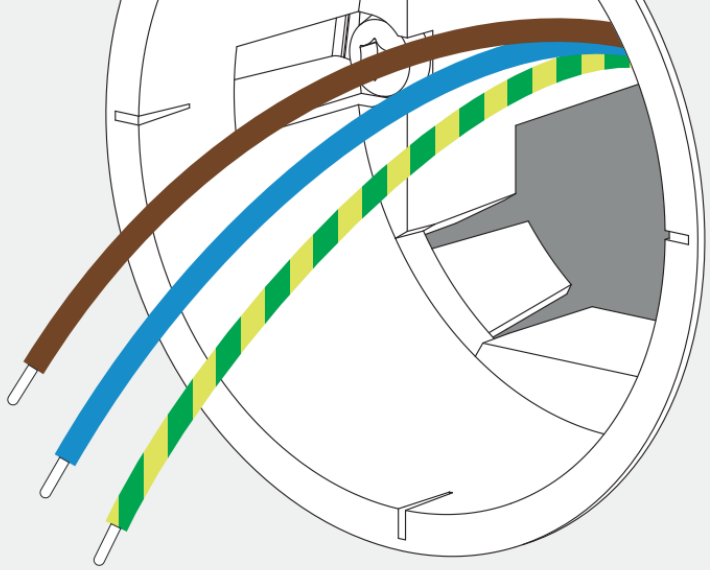

5

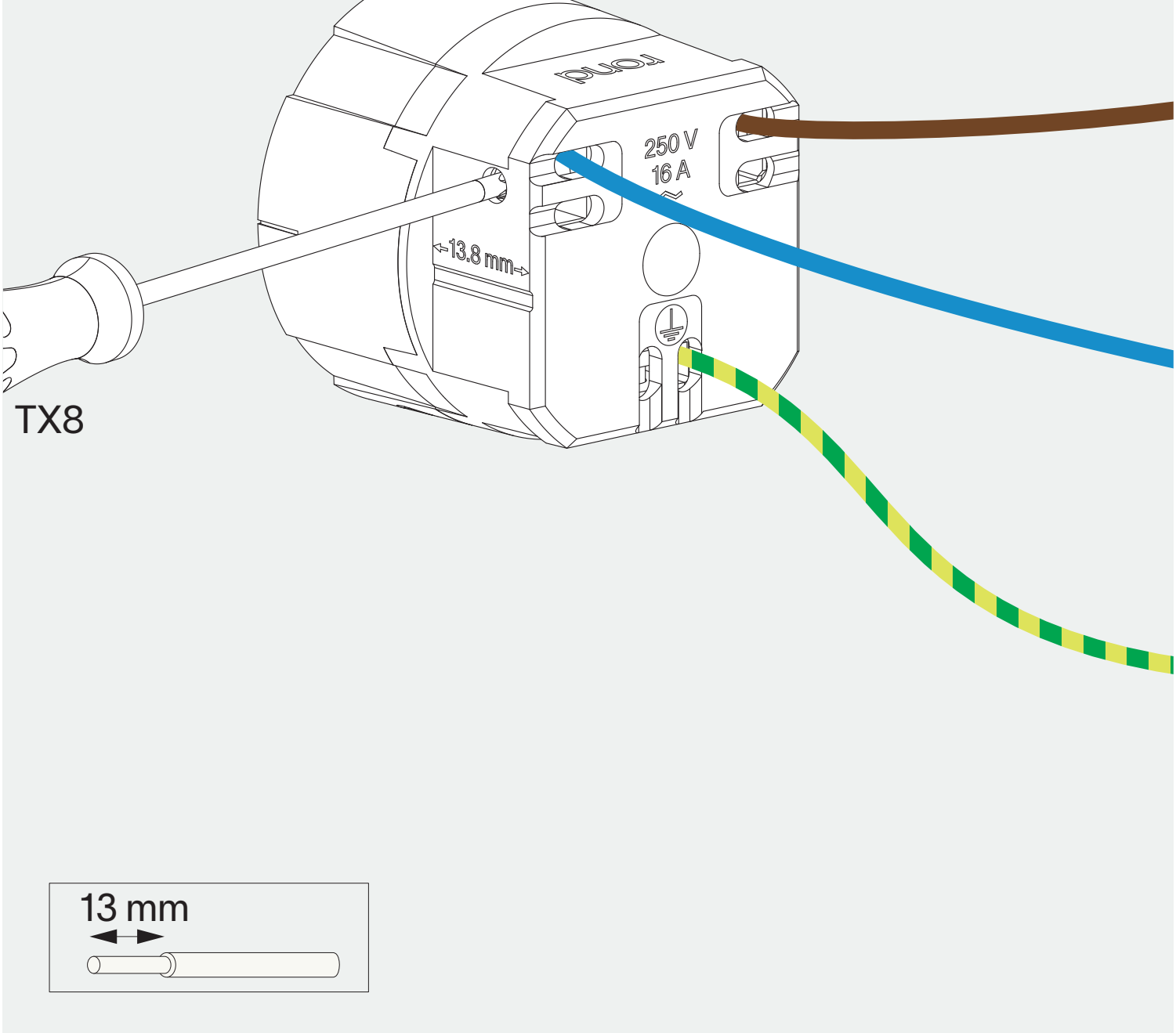


6

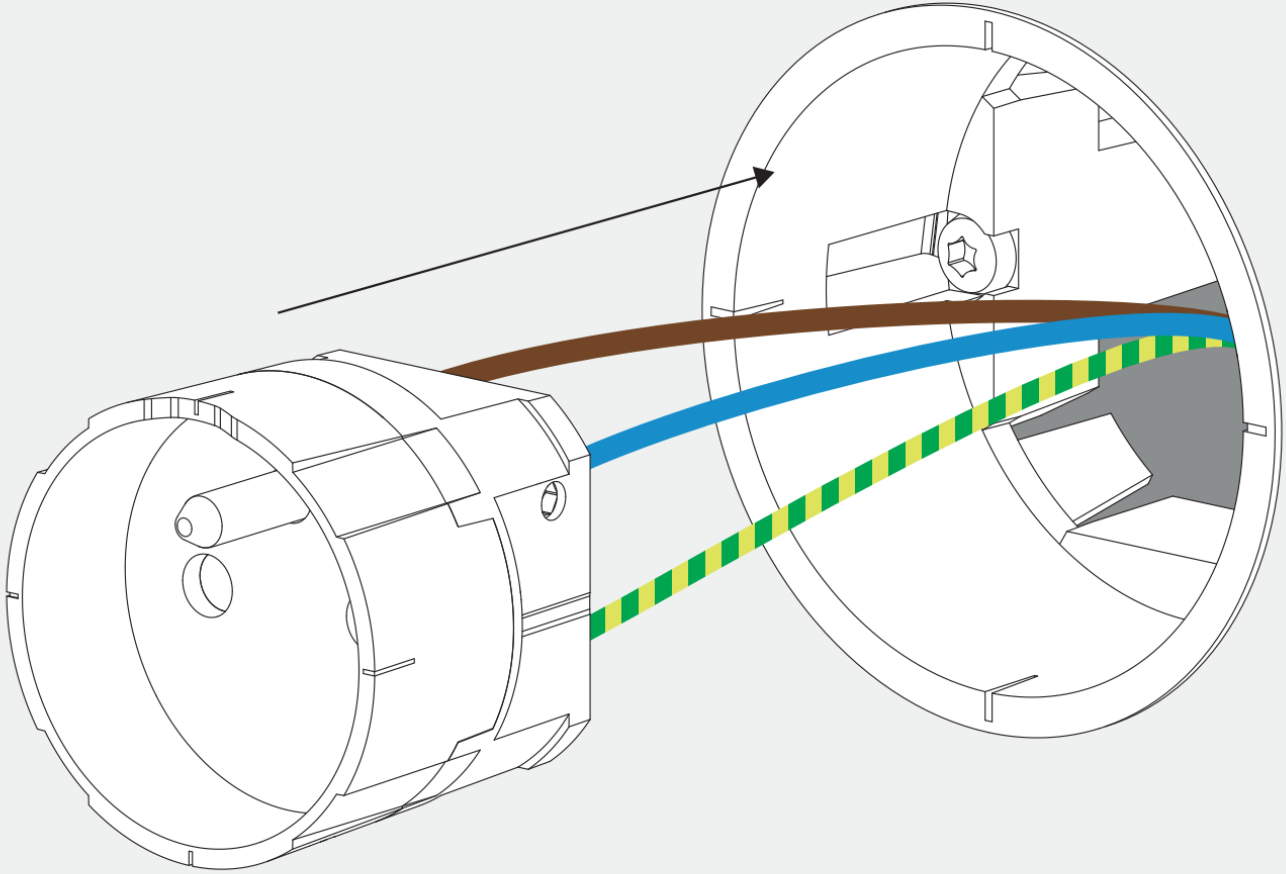

7

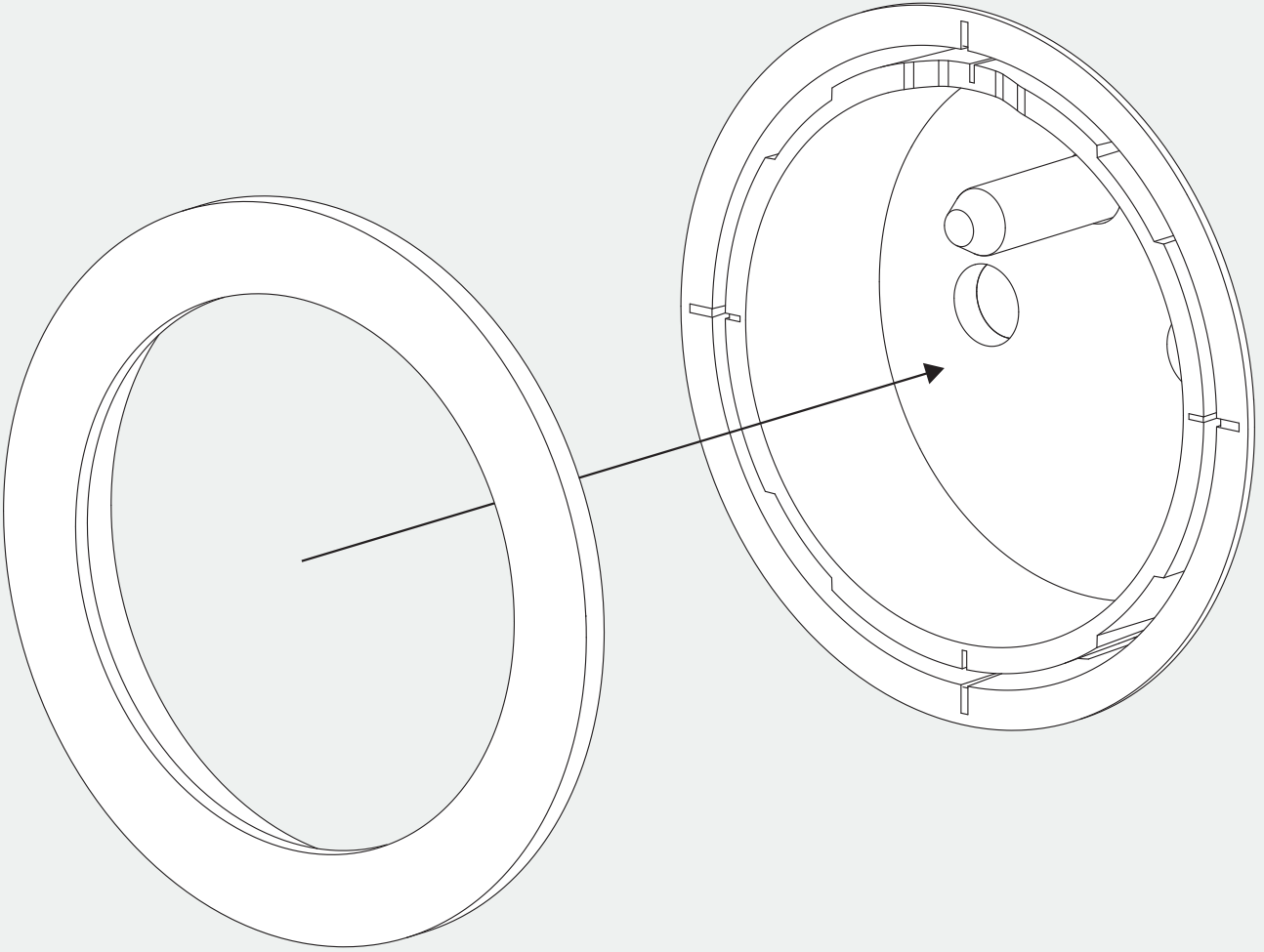

8

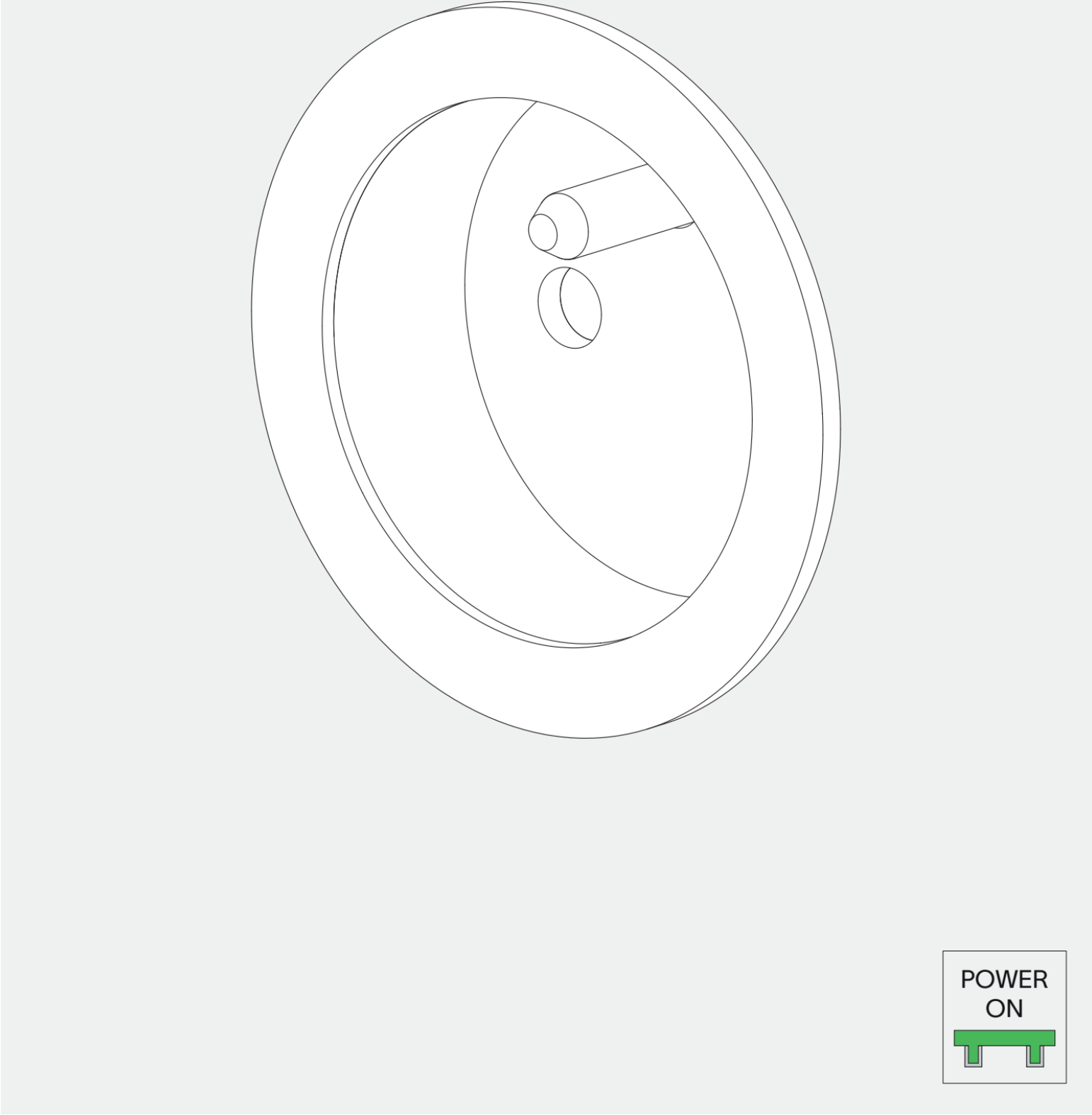


for removal

1

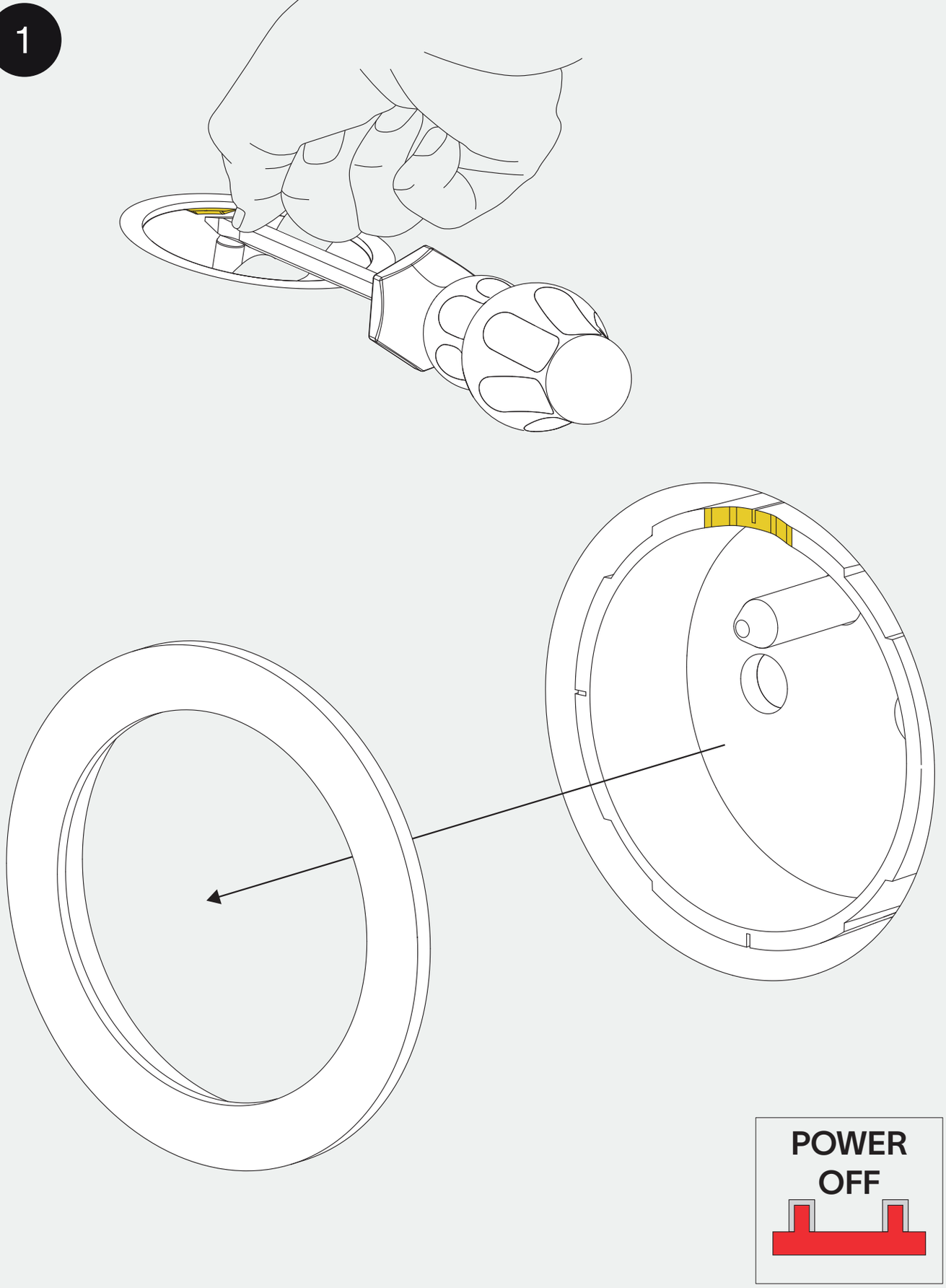


2

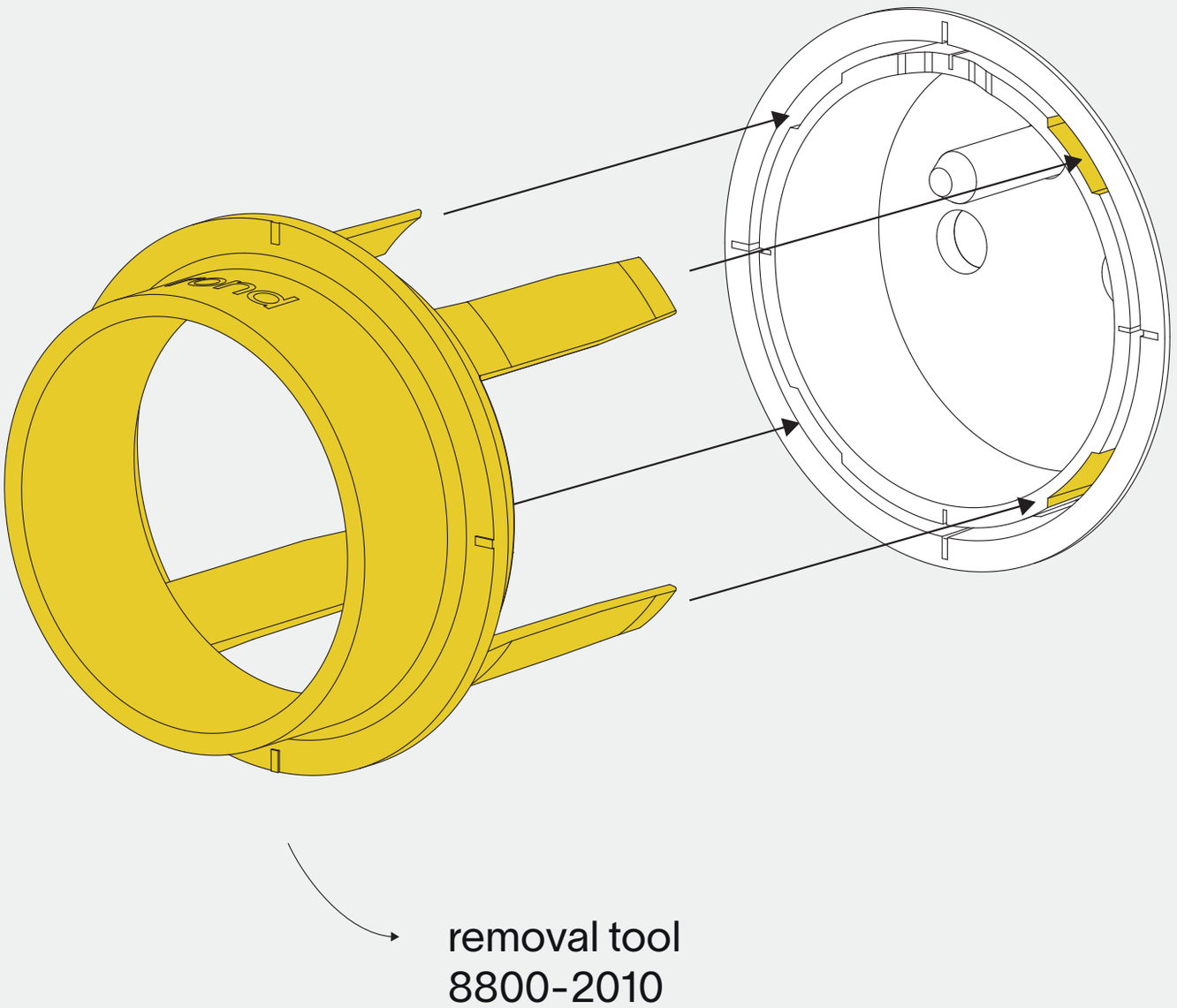


3

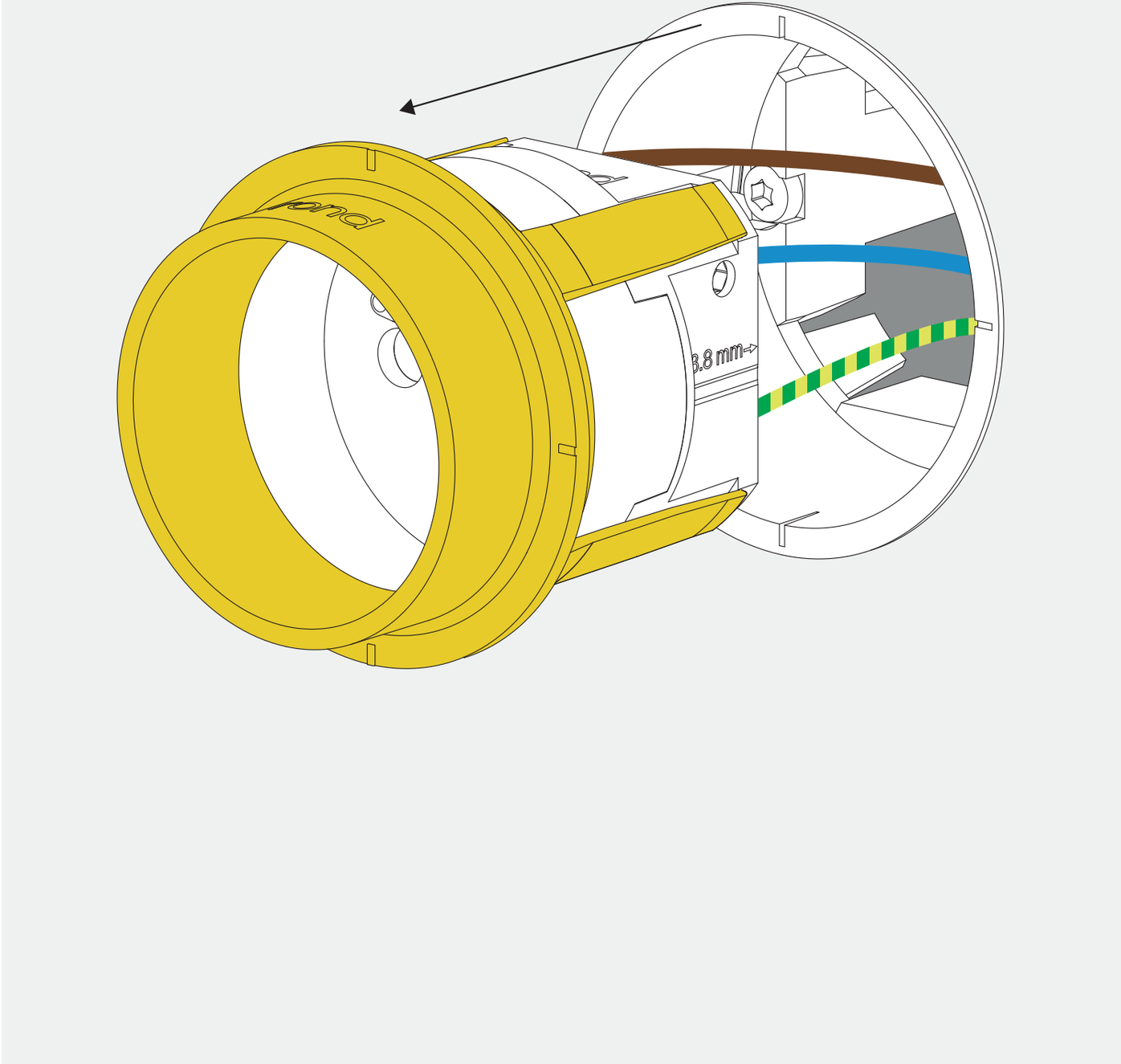


thank you for choosing rond

DE Oude SCHAKELAAR

16/250

Installation must be done by skilled professionals only and instructions must be followed at all times. Warranty will not apply in case of wrongful use of if unskilled personnel attempts to repair a product.