rond DE Oude SCHAKELAAR

potential-free push button
installation instruction

1

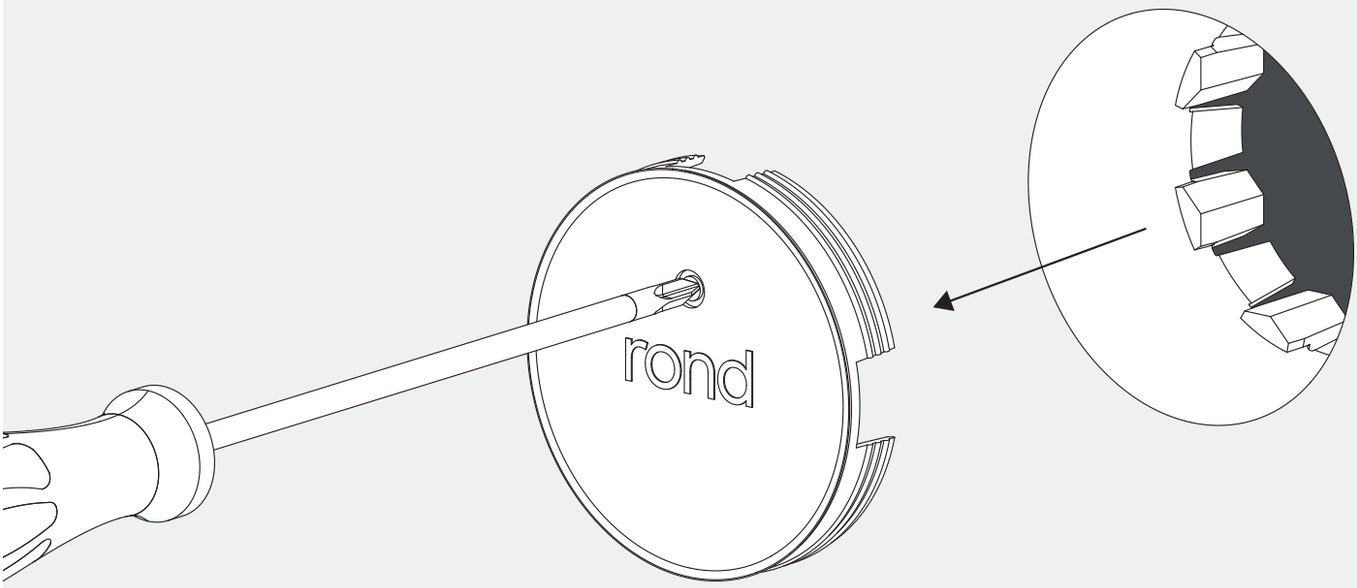

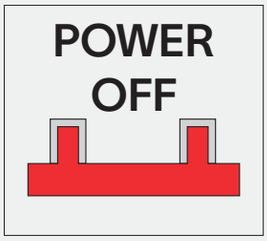

2

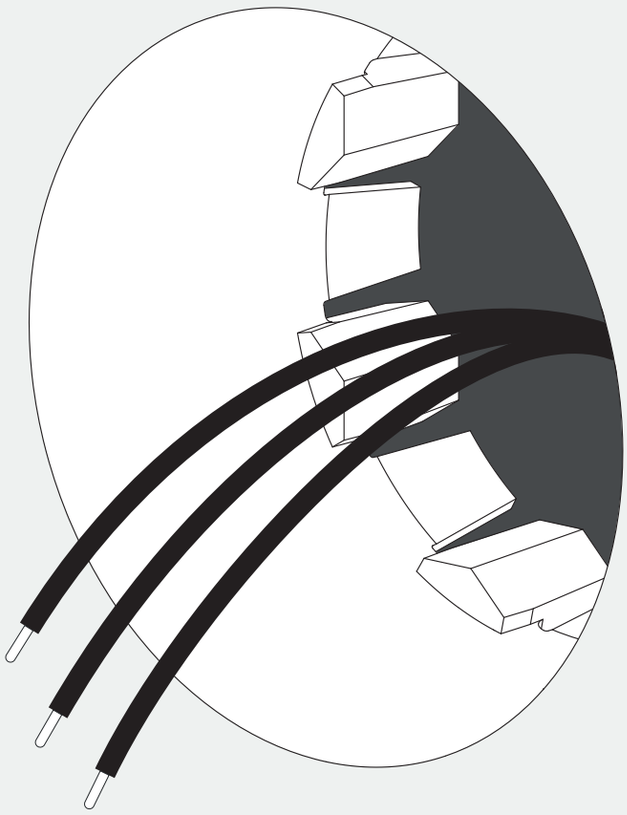

3

two-fold

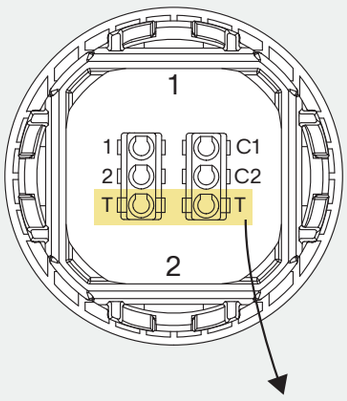

four-fold

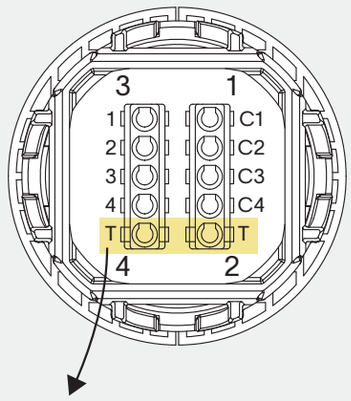

NTC temperature sensor

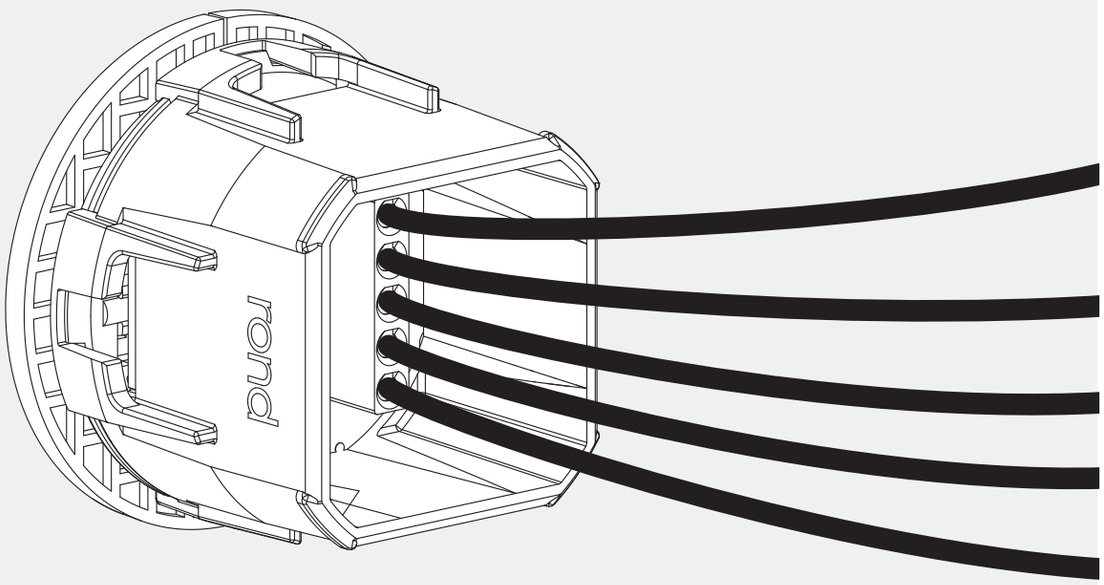

18-26 AWG/0.15-0.75 mm²
4±0.5 mm

dimmer model scheme

universal dimmer with control voltage-free pushbutton
pushbutton galvanically isolated from the mains voltage

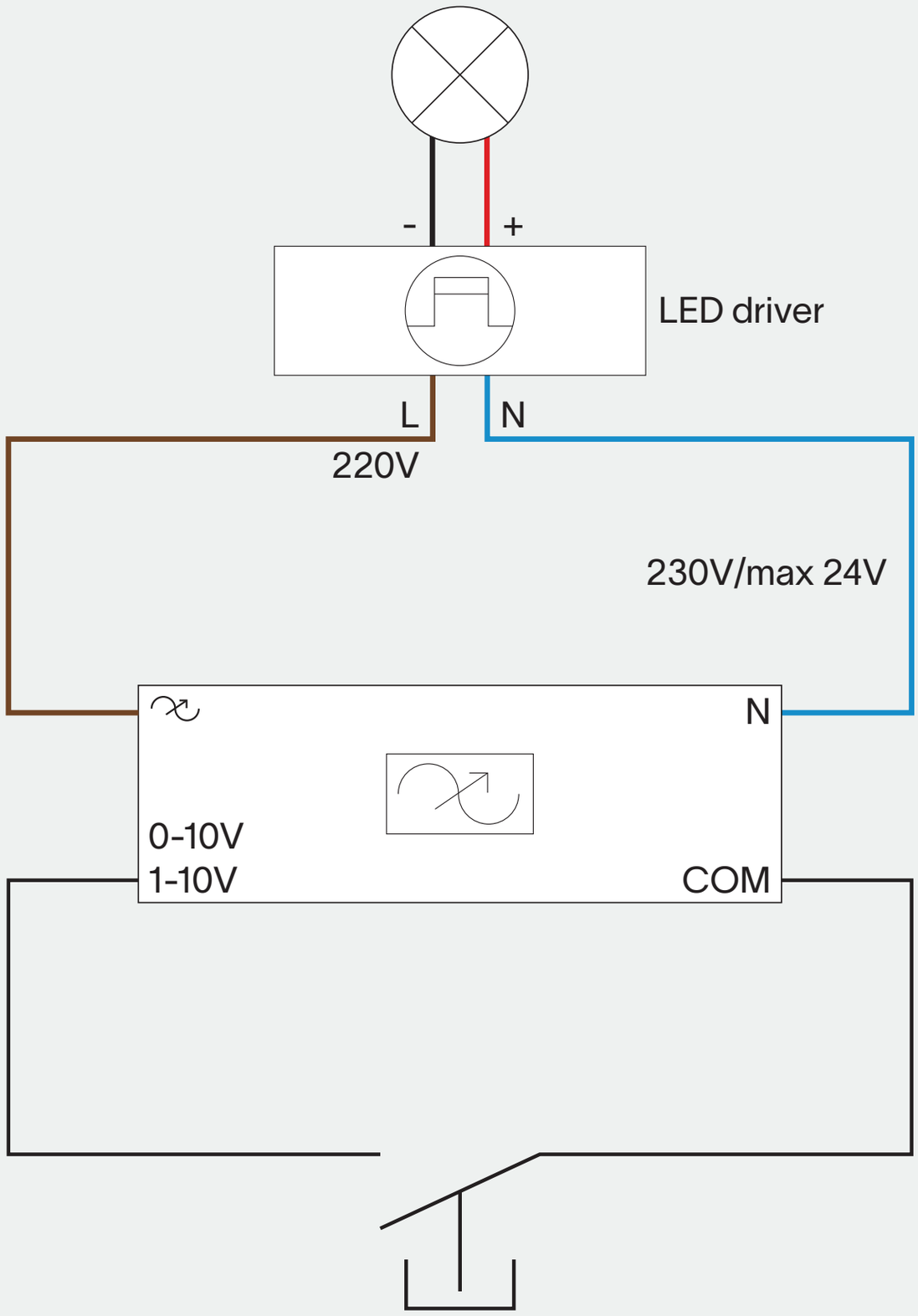

pushbutton rond - 1 input

teleruptor model scheme

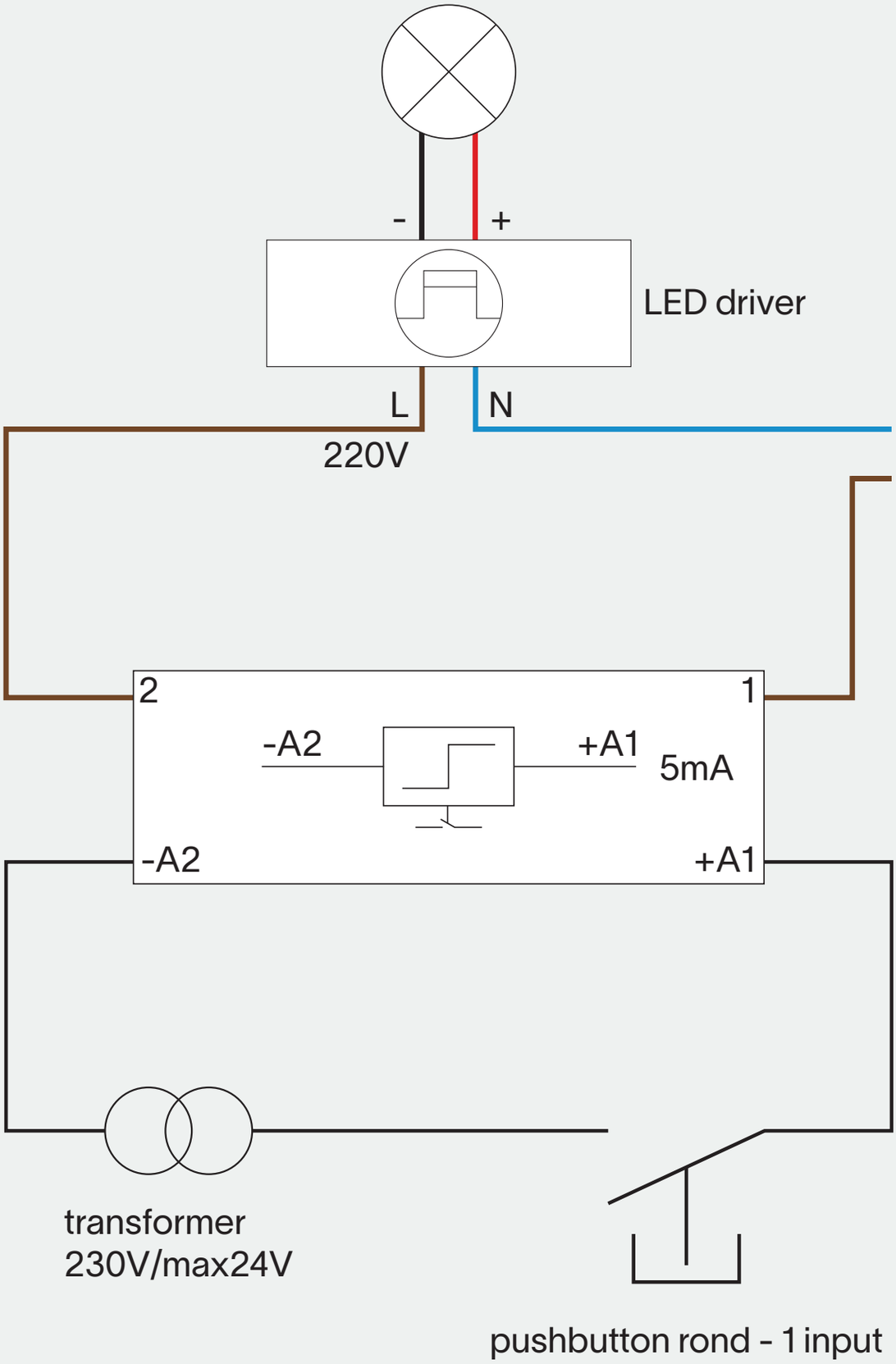
-
+
LED driver
L
N
220V
2
1
-A2
+A1
5mA
-A2
+A1
transformer
230V/max24V
pushbutton rond - 1 input

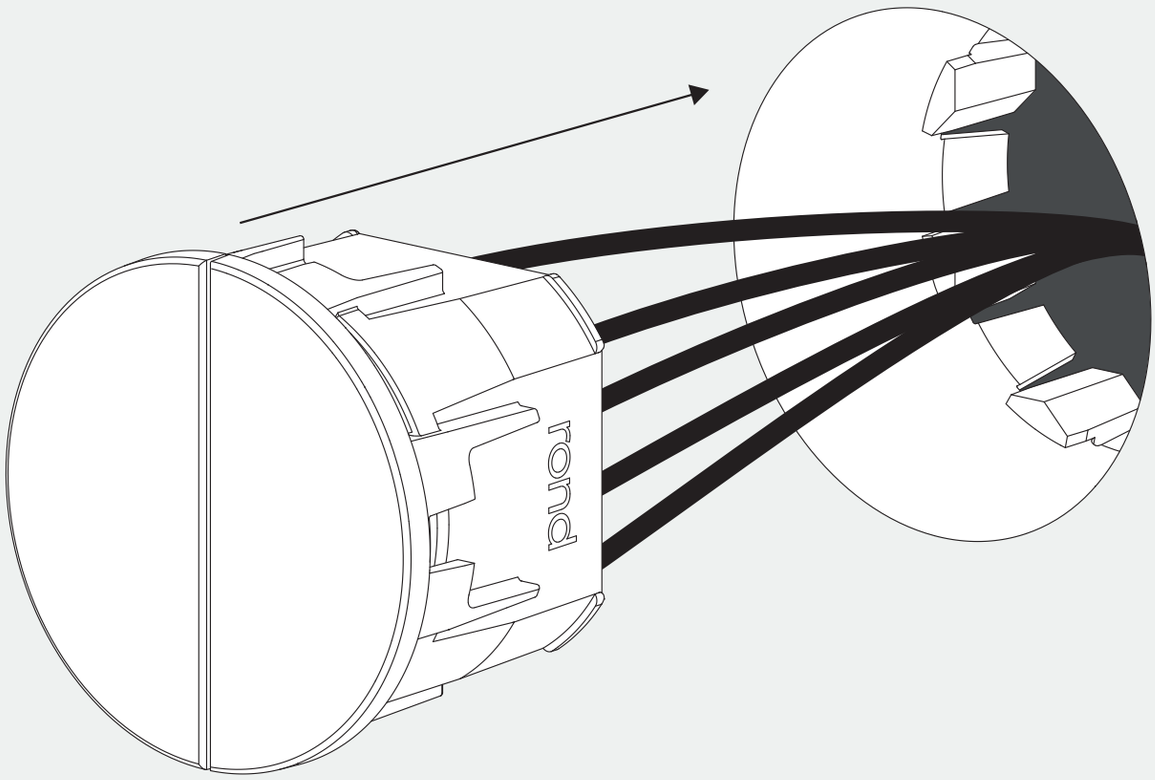

5

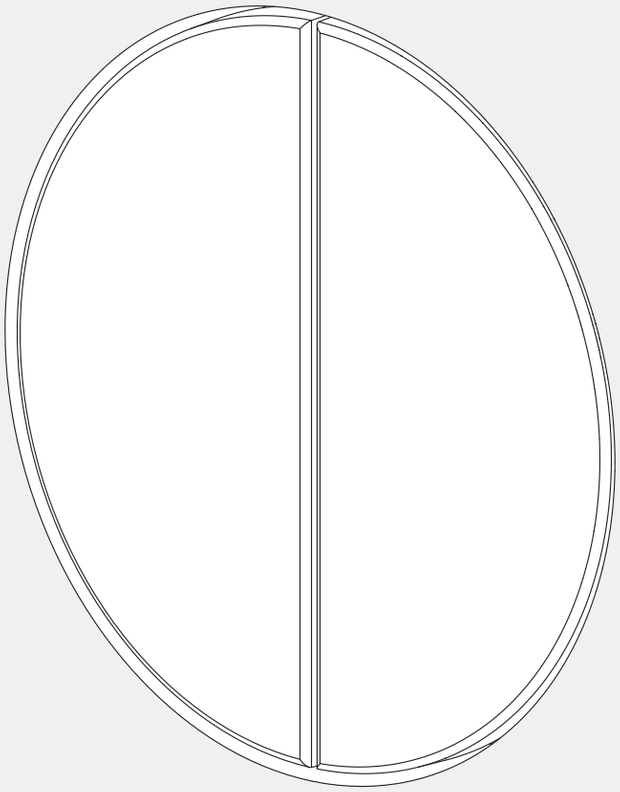

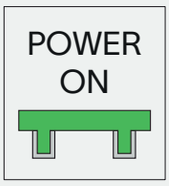

for small trim

6

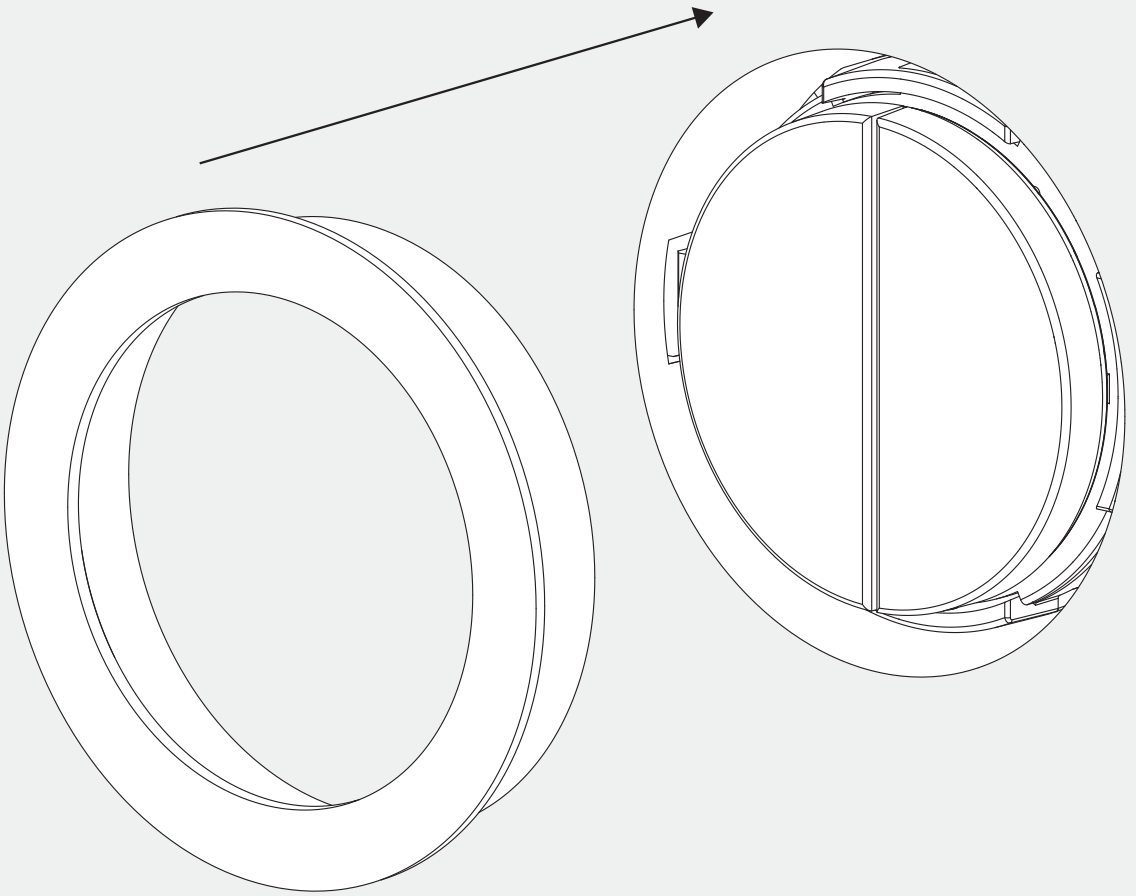

7

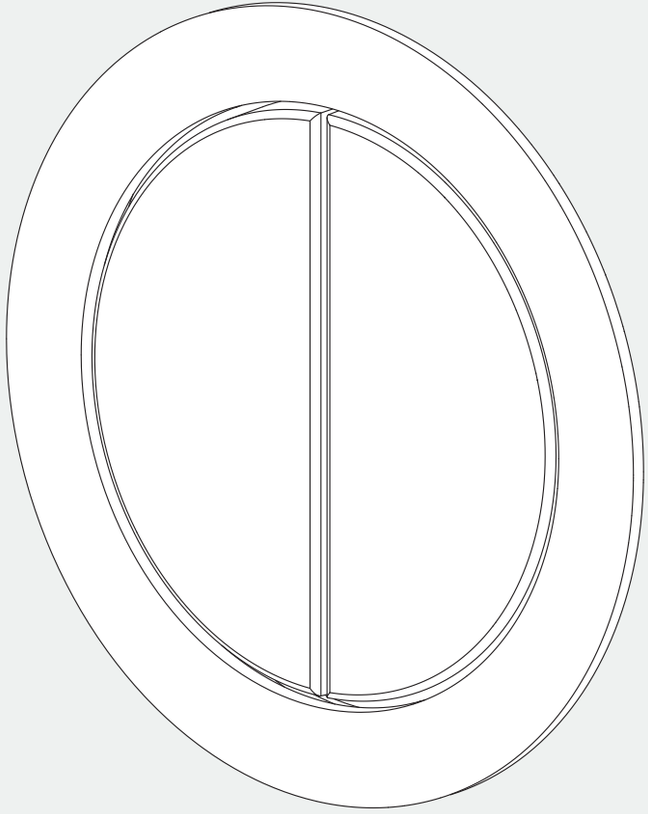

for removal

8

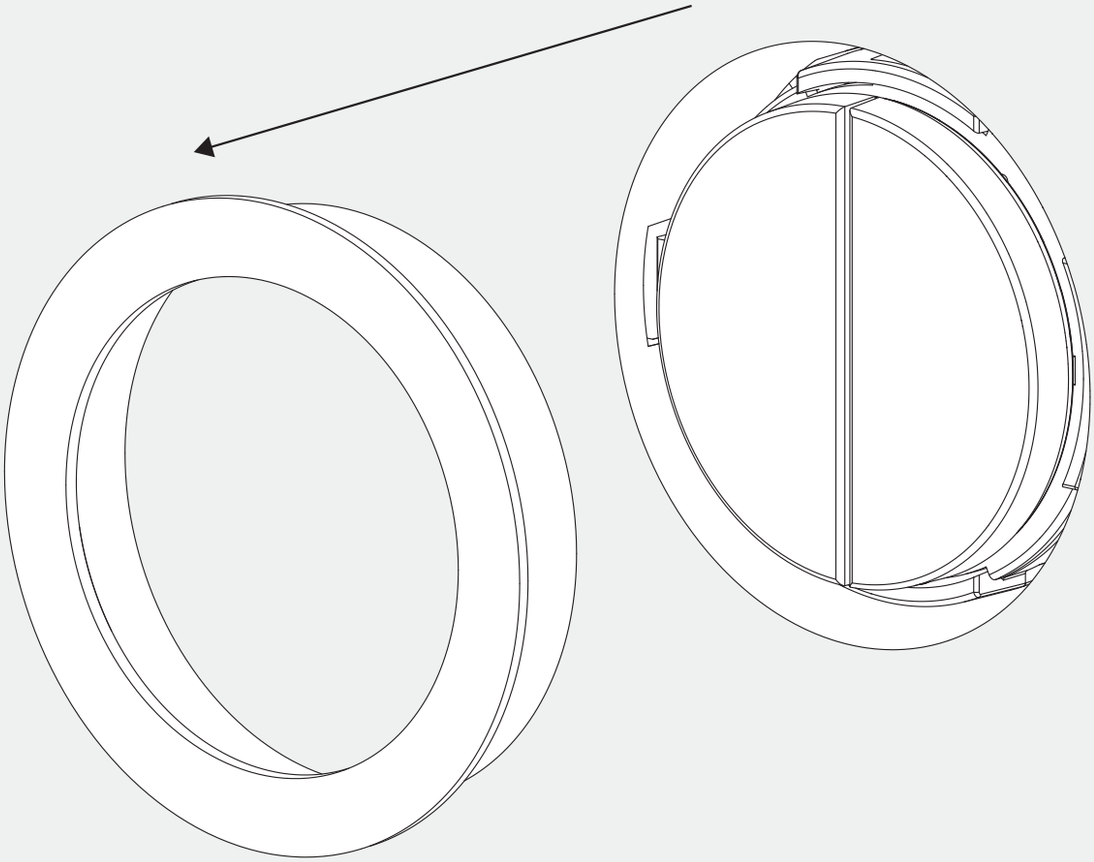

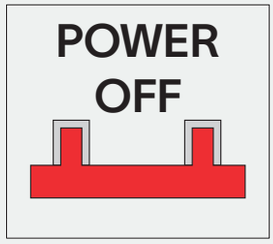

9

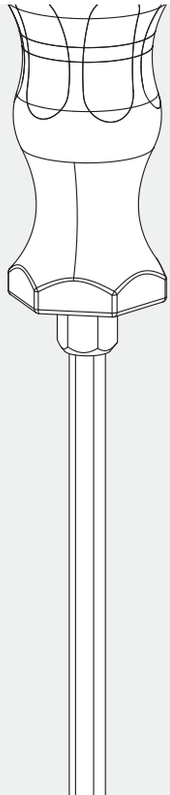

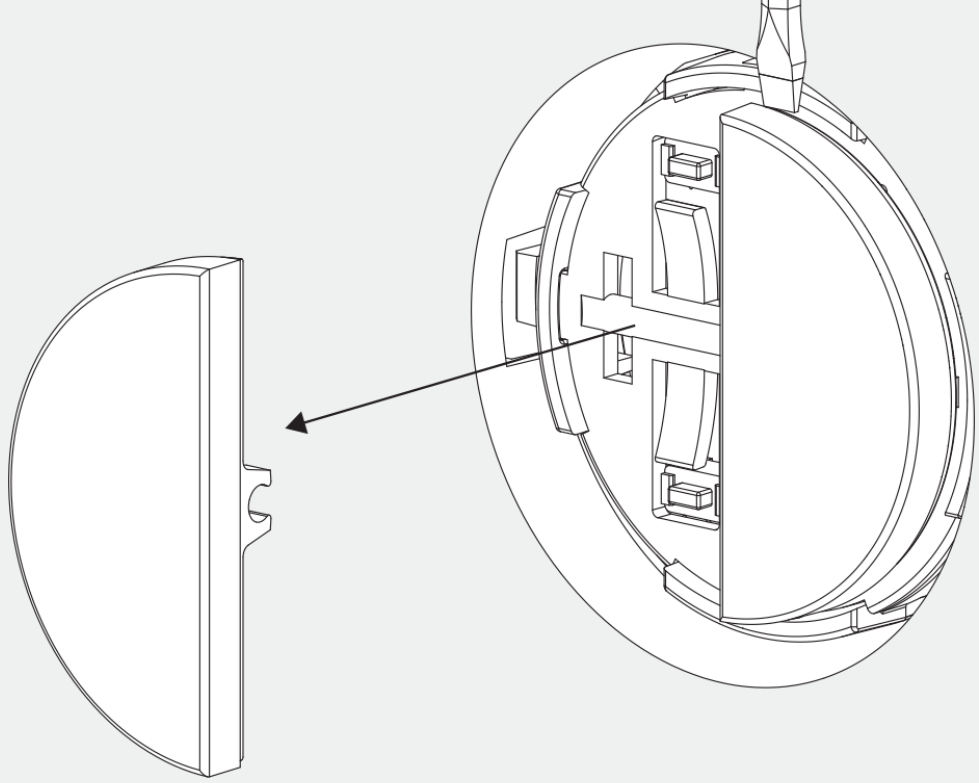

10

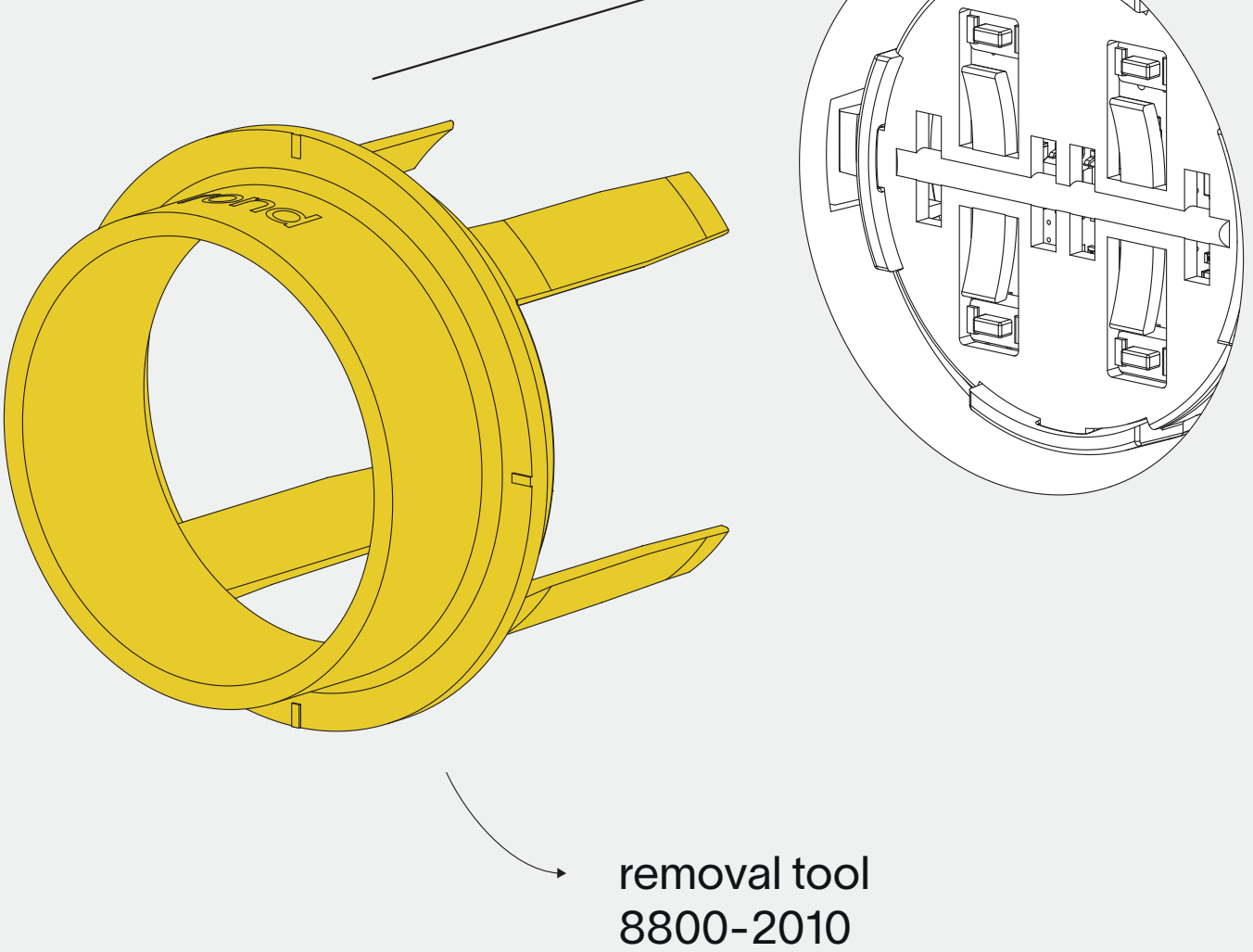

11

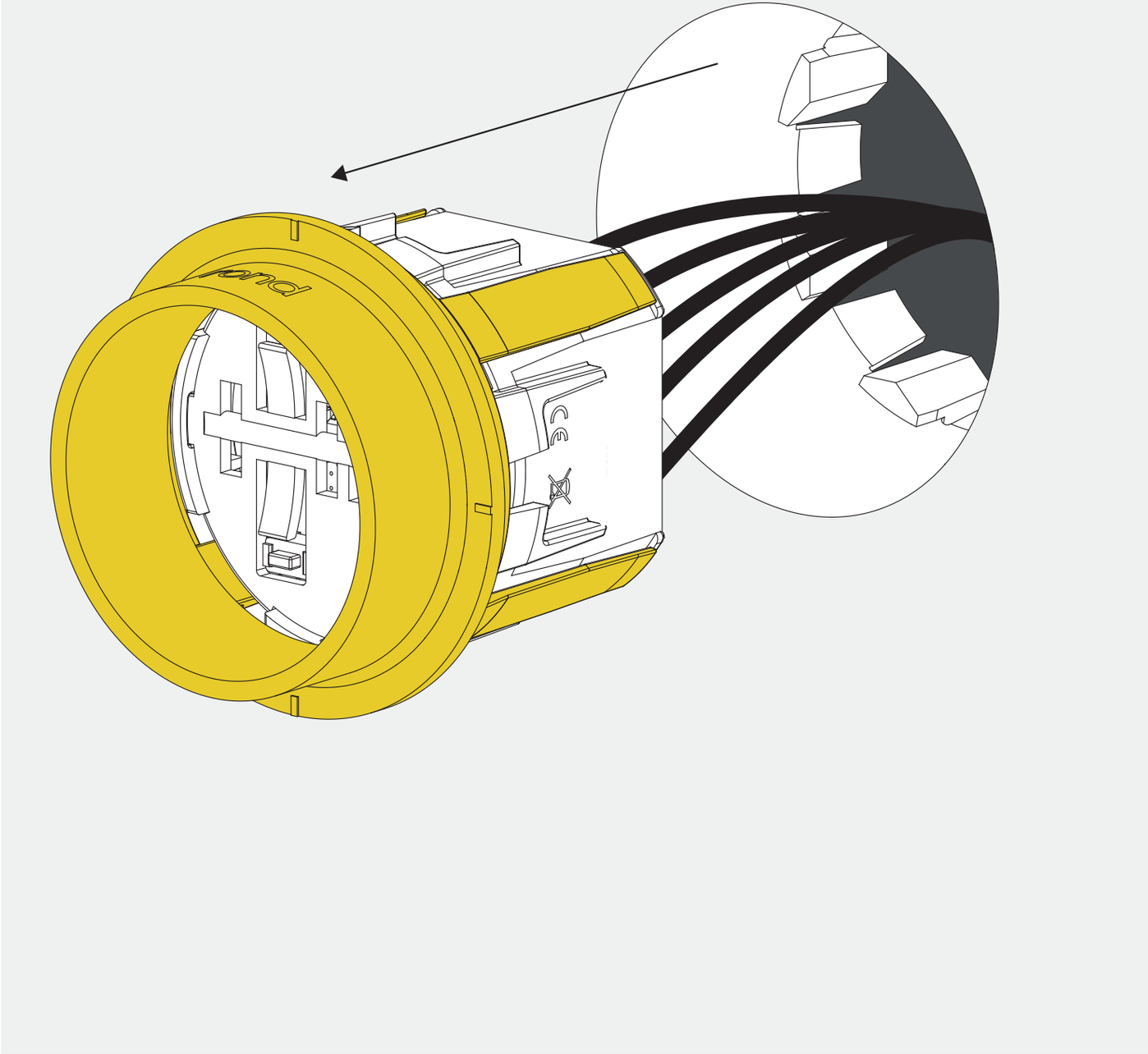

thank you for choosing rond

Installation must be done by skilled professionals only and instructions must be followed at all times. Warranty will not apply in case of wrongful use of if unskilled personnel attempts to repair a product.